AlphaESS
your smart energy

V08

INSTALLATION, OPERATION & MAINTENANCE MANUAL OF SMILE - G3 - T4 / T5 / T6 / T8 / T10

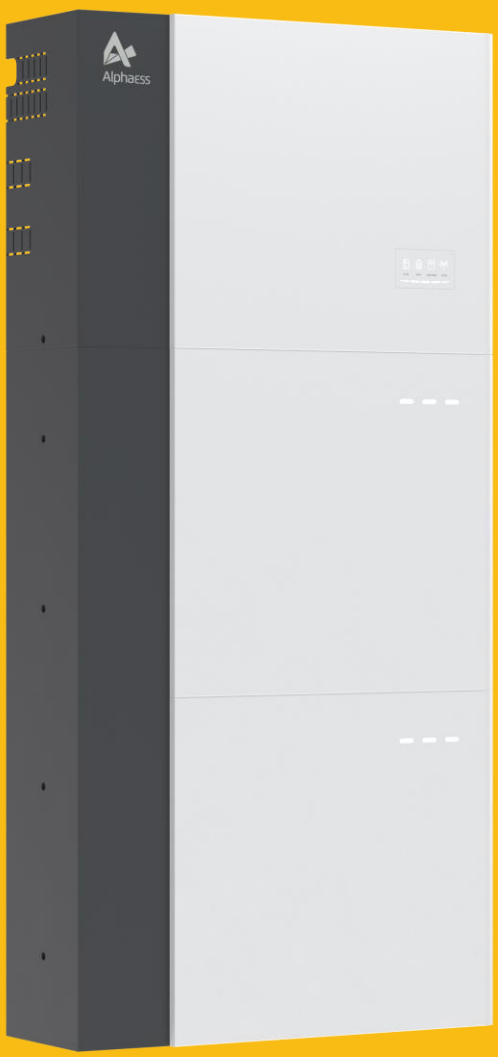

DISCLAIMER

Copyright © Alpha ESS Co., Ltd. 2024. All rights reserved.

No part of this document may be reproduced or transmitted in any form or by any means without prior written consent of Alpha ESS Co., Ltd.

The material furnished in this document is believed to be accurate and reliable. The information and recommendations in this document do not constitute commitments or warranties in the form of assignments. The information in this document is subject to change without notice. You may refer to the AlphaCloud Platform (https://cloud.alphaess.com) for the most updated version.

All company and brand products and service names are trademarks or registered trademarks of their respective holders.

COPYRIGHT STATEMENT

This manual is under the copyright of Alpha ESS Co., Ltd. with all rights reserved. Please retain this manual and operate the Product in accordance with all safety and operating instructions in this manual. Please do not operate the product before reading through the manual.

TABLE OF CONTENTS

DISCLAIMER 1

COPYRIGHT STATEMENT 2

TABLE OF CONTENTS 3

1. Introduction 7

1.1. Content and Structure of this Document 7

1.2. Target Group 7

1.3. Levels of Warning Messages 8

1.4. Definition of Abbreviations and Nouns 9

2. Safety 10

2.1. Intended Use 10

2.2. Safety Instructions for Battery 11

2.2.1. General Safety Precautions 11

2.2.2. Response to Emergency Situations 11

2.3. Important Safety Instructions 12

2.4. Symbols Explanation 16

3. Product Introduction and Application Scenarios 19

3.1. Naming Convention 19

3.2. System Introduction 21

3.3. Product Description 22

3.3.1. Inverter Electrical Interface & Connections Introduction 22

3.3.2. Inverter Display Interface Introduction 23

3.3.3. Battery Display Interface Introduction 24

3.3.4. Battery Introduction of SMILE-G3-BAT-8.2P 25

3.3.5. Battery Introduction of SMILE-G3-BAT-3.6S/4.0S 26

3.3.6. Battery Introduction of SMILE-G3-BAT-3.8S 27

3.4. Application Scenarios 28

3.4.1. DC-Coupled Energy Storage System 28
3.4.2. AC-Coupled Energy Storage System 28
3.4.3. Hybrid-Coupled Energy Storage System 29
3.4.4. Off-Grid Energy Storage System 29

4. Storage and Transport 30

4.1. Storage 30

4.1.1. Inverter Storage 30
4.1.2. Battery Storage 30

4.2. Transport 31

5. Mounting 32

5.1. Checking the Outer Packaging 32

5.2. Scope of Delivery 32

5.3. Requirements for Mounting 37

5.3.1. Basic Requirements 37
5.3.2. Mounting Environment Requirements 37
5.3.3. Mounting Structure Requirements 38
5.3.4. Mounting Angle and Stack Requirement 38
5.3.5. Mounting Space Requirements 39

5.4. Preparing Tools and Instruments 41

5.5. Mounting the System 42

5.5.1. Mounting the Parallel Battery 42
5.5.2. Mounting the Series Battery 44
5.5.3. Mounting the Energy Storage Inverter 54
5.5.4. Special Feature Only for Battery SMILE-G3-BAT-3.6S/4.0S 56
5.5.5. Mounting the Wi-Fi Module 58

6. Electrical Connection 59

6.1. Cable Requirements for Connection 60

6.2. Grounding Connection 61

6.3. AC Connection 62

6.3.1. Requirements for the AC Connection 62

6.3.2. Selecting Suitable AC Circuit Breaker 63
6.3.3. Grid and Backup Connection 64
6.3.4. Disassembling Grid and Backup Connectors 66
6.3.5. Meter Connection 67
6.4. PV Connection 72
6.5. Electrical Connection between the Inverter and Battery 74
6.5.1. Communication Connection between INV and BAT 74
6.5.2. System Connection between INV and BAT 75
6.5.3. Disassembling BAT Connectors 85
6.6. Communication Connection with Inverter 86
6.7. Mount the Covers of the Inverter and Battery 88
7. Operation 95
7.1. Power On the System 95
7.2. Power Off the System 96
8. Commissioning 97
8.1. Checks Before Power-On 97
8.2. Power on the Product before Commissioning 98
8.3. Wi-Fi Module Configuration and Basic Parameters Settings 99
8.3.1. Download and Install the App 99
8.3.2. Wi-Fi Configuration 99
8.3.3. Basic Parameters Settings 102
8.4. Installing New System and Settings on the App 108
8.4.1. Register as an Installer 108
8.4.2. Overview of Functions for Installer Account 109
8.4.3. Install New System on the App 110
8.4.4. Instruct the End User to Install the App 112
8.5. Register on AlphaCloud 112
8.5.1. Register an Installer Account on AlphaCloud 112
8.5.2. Install New System on AlphaCloud 114
8.6. Check System Wiring and Meter Installation 115

9. Maintenance and Troubleshooting 119

9.1. Routine Maintenance 119

9.2. Troubleshooting 120

9.2.1. Common Errors 120

9.2.2. Battery Protection Description for SMILE-G3-BAT-8.2P 128

9.2.3. Battery Protection Description for Series Battery 129

9.2.4. Battery Error Description 130

10. Product Removal & Return 131

10.1. Removing the Product 131

10.2. Packing the Product 131

10.3. Disposing of the Product 131

11. Technical Data 132

11.1. Datasheet of Inverter (SMILE-G3 Three Phase Inverter) 132

11.2. Datasheet of Battery 138

11.2.1. Datasheet of Battery SMILE-G3-BAT-8.2P 138

11.2.2. Datasheet of Battery SMILE-G3-BAT-3.6S 139

11.2.3. Datasheet of Battery SMILE-G3-BAT-3.8S 140

11.2.4. Datasheet of Battery SMILE-G3-BAT-4.0S 141

Appendix 1: System Wiring Diagram 142

Appendix 2: Regional Application Standard 152

1. Introduction

1.1. Content and Structure of this Document

This document is valid for SMILE-G3 three-phase energy storage system, which includes inverter SMILE-G3-T4/T5/T6/T8/T10-INV and battery SMILE-G3-BAT-8.2P, SMILE-G3-BAT-3.6S/3.8S/4.0S. SMILE-G3-BAT-3.6S is only for the Greek market.
This document describes the mounting, installation, commissioning, configuration, operation, troubleshooting and decommissioning of the energy storage system as well as the operation of the user interface.
Please read all documentation that accompanies the product. Keep them in a convenient place and available at all times.
Illustrations in this document are reduced to the essential information and may deviate from the real product.

1.2. Target Group

This document is intended for qualified personnel. Only qualified personnel are allowed to perform the operations marked with a warning symbol in this document.
Qualified personnel must have:

- Knowledge of working principle of inverters.
- Knowledge of how to deal with the dangers and risks associated with installing and using electrical devices, batteries and energy storage system.
- Knowledge of the installation and commissioning of electrical devices and energy storage system.
- Knowledge of the applicable standards and directives relevant to the product and its installation.
- Understood and complied with this document, including all safety precautions.
- Understood and complied with the documents of the battery manufacturer and inverter manufacturer, including all safety precautions.

1.3. Levels of Warning Messages

The following levels of warning messages may occur when handling the product.

DANGER DANGER indicates a hazardous situation that will result in serious injury or even death if not avoided.
WARNING WARNING indicates a hazardous situation that could result in serious injury or even death if not avoided.
CAUTION CAUTION indicates a hazardous situation that could result in minor or moderate injury if not avoided.
NOTICE NOTICE indicates a situation that could result in property damage if not avoided.
INFORMATION provides tips for the optimal installation and operation of the product.

1.4. Definition of Abbreviations and Nouns

A

AC	alternating current
App	application
AUX	auxiliary

B

BAT	battery
BMS	battery management system

D

DC	direct current

E

EMS	energy management system

I

INV	inverter

P

PV	photovoltaic

S

SOC	the State of Charge

2. Safety

2.1. Intended Use

The inverter, batteries and electricity meters together form a system designed to optimise the self-consumption of electrical energy in a household. The inverter transfers energy between AC current and DC current while the battery is used for the storage of energy (typically storing surplus energy produced by solar arrays).

SMILE-G3-T4/T5/T6/T8/T10-INV and SMILE-G3-BAT-3.6S/4.0S are suitable for indoor and outdoor installation.

SMILE -G3-BAT-8.2P and SMILE -G3-BAT-3.8S are only suitable for indoor installation.

The SMILE-G3-T4/T5/T6/T8/T10-INV must only be operated with PV arrays of protection class II in accordance with IEC 61730, application class A. The PV modules must be compatible with this product.

The product is not equipped with an integrated transformer and therefore has no galvanic isolation.

The product must not be operated with PV modules whose outputs are grounded. This can cause the product to be destroyed. The product may be operated with PV modules whose frame is grounded.

PV modules with a high capacity to ground can be used only when their coupling capacity does not exceed 1.0 µF.

All components must be used in a manner and environment in compliance with the requirements of this manual and in compliance with all relevant local Standards and directives. Any other operation may cause personal injury or property damage.

Alterations to the product, e.g. changes or modifications, are only permitted with the express written permission of AlphaESS. Unauthorized alterations will void the product warranty(s). AlphaESS shall not be held liable for any damage caused by such changes.

Any use of the product other than that described in the Intended Use section does not qualify as appropriate.

The enclosed documentation is an integral part of this product. Keep the documentation in a convenient place for future reference and comply with all instructions contained therein.

The type label must remain permanently attached to the product.

2.2. Safety Instructions for Battery

2.2.1. General Safety Precautions

- Before installing any part of the SMILE-G3, please read the Installation Manual completely. If additional hardware is being installed at the same time as the SMILE-G3 unit (e.g. a Backup device or a separate AC-coupled PV system), please read the Installation Manual for each component/system before commencing installation of any hardware. The installation of one piece of hardware may create hazards for the installation of another piece of hardware – be sure to read all Manuals to understand the interaction and safety implications of the combined systems.
- Overvoltage or incorrect wiring can damage the battery and cause deflagration, which can be extremely dangerous.
- All types of battery breakdown may lead to electrolyte or flammable gas leakage.
- The battery is not user-serviceable because there is high voltage in the device.
- Read the label with Warning Symbols and Precautions on the right side of the battery.
- Do not connect any AC conductors or PV conductors directly to the battery which should be connected only to the inverter.
- Do not charge or discharge a damaged battery.
- Do not damage the battery by dropping, deforming, impacting, cutting or penetrating it with a sharp object. Battery damage may cause a leakage of electrolyte or fire.
- Do not expose the battery to an open flame.

2.2.2. Response to Emergency Situations

The battery is designed to prevent the danger caused by malfunction.

- In the case of user exposure to the electrolyte or other internal materials of the battery cells, the list below details recommended actions dependent on the type of exposure:

1. Inhalation: Leave the contaminated area immediately and seek medical attention.
2. Eye injuries: Rinse eyes with running water for 15 minutes and seek medical attention.
3. Skin injuries: Wash the affected area thoroughly with soap and seek medical attention.
4. Ingestion: Induce vomiting and seek medical attention.

If a fire breaks out in the place where the battery is installed, please follow these measures:

- Fire extinguishing methods

1. A Respirator is not required during normal operations.
2. Use an FM-200 or CO_2 extinguisher for battery fire.
3. In the case of a fire in the property but where the fire has not yet reached the battery, if it is safe to do so, use an ABC fire extinguisher and prevent the fire from reaching the battery.

- Firefighting instructions

1. If a fire occurs when charging the batteries, if it is safe to do so, disconnect the battery circuit breaker to shut off the power to the batteries.

2. If the battery is not on fire yet, extinguish the fire before the battery catches fire.
3. If the battery is on fire, do not try to extinguish it but evacuate people immediately.

WARNING

There may be a possible explosion when batteries are heated above 150°C.
The battery leaks poisonous gases when it is burning. Do not approach.

- Effective ways to deal with accidents

1. On land: Place damaged battery in a segregated place and call local fire department or technical service engineer.

2. In water: Stay out of the water and don't touch anything if any part of the battery, inverter, or wiring is submerged.

3. Do not use submerged battery again and contact an AlphaESS-Accredited or Battery-Accredited technical service engineer.

2.3. Important Safety Instructions

DANGER

Danger to life due to electric shock when live components or DC cables are touched

The DC cables connected to a battery or a PV module may be live. Touching live DC cables can result in serious injury or even death due to electric shock. To avoid this danger:
• Disconnect the inverter and battery from voltage sources and make sure it cannot be reconnected before working on the device.
• Do not touch non-insulated parts or cables.
• Do not disconnect the DC connectors under load.
• Wear suitable personal protective equipment for all work on the product.
• Observe all safety information of this document.

DANGER

Danger to life due to electric shock if live system components in backup mode are touched

Even if the grid circuit breaker and the PV switch of the inverter are disconnected, parts of the system may still be live when the battery is switched on due to backup mode. To avoid this danger:
• Before performing any work on the inverter, disconnect it from all voltage sources as described in this document.

DANGER

Danger to life due to electric shock if touching live components or DC cables when working on the battery

The DC cables connected to the battery may be live. Touching live DC cables can result in serious injury or even death due to electric shock. To avoid this danger:

• Before performing any work on the battery, disconnect the inverter from all voltage sources as described in this document.

DANGER

Danger to life due to electric shock if touching live components when the inverter or battery cover is open

High voltages are present in the live parts and cables inside the system during operation. Touching live parts and cables can result in significant injuries or even death due to electric shock. To avoid this danger:

• Do not open the system cover.

DANGER

Danger to life due to electric shock if live components are touched during a ground fault

When a ground fault occurs, parts of the energy storage system may still be live. Touching live parts and cables can result in significant injuries or even death due to electric shock. To avoid this danger:

- Disconnect the product from voltage sources and make sure it cannot be reconnected before working on the device.
- Touch the cables of the PV array on the insulation only.
- Do not touch any parts of the substructure or frame of the PV array.
- Do not connect PV strings with ground faults to the inverter.

DANGER

Danger to life due to electric shock if an ungrounded PV module or array frame is touched

Touching ungrounded PV modules or array frames can result in significant injuries or even death due to electric shock. To avoid this danger:

- Connect and ground the frame of the PV modules, the array mounting frame and the electrically conductive surfaces to ensure continuous conduction.
- Observe the applicable local regulations.

DANGER

Danger to life due to dangerous voltages on the battery.

There is dangerous voltage at the terminal of the battery power cable. Touching the terminal of the battery power cable can result in a lethal electric shock. To avoid this danger:

• Do not open the battery cover.

• Leave the protective caps on the connectors for the battery's power connection until the inverter cables are connected to the battery.

• Disconnect the system from voltage sources and make sure it cannot be reconnected before working on the inverter or the battery.

WARNING

Risk of chemical burns from electrolyte or toxic gases

During normal operation, no electrolyte would leak from the battery and no toxic gases would form. Despite careful construction, if the battery is damaged or a fault occurs, it is possible that electrolyte may leak or toxic gases may form. To avoid this danger:

• Store the battery in a cool and dry place.

• Do not drop the battery or expose it to sharp objects.

• Protect the battery from mechanical damage from vehicles, tools and other objects.

• Only set the battery down on its back or its base.

• Do not open the battery.

• Do not install or operate the battery in potentially explosive atmosphere or areas of high humidity.

• If moisture has penetrated the battery (e.g. due to a damaged housing), do not install or operate the battery.

• In case of contact with electrolyte, rinse the affected areas immediately with water and seek medical attention without delay.

WARNING

Danger to life due to burns caused by electric arcs through short-circuit currents

Short-circuit currents in the battery can cause heat build-up and electric arcs. Heat build-up and electric arcs may result in lethal injuries due to burns. To avoid this danger:

• Disconnect the battery from all voltage sources before performing any work on it.

• Observe all safety information of this document.

CAUTION

Risk of burns from the inverter's hot surface

The surface of the inverter can get extremely hot during operation, and touching it can result in burns. To avoid this danger:
• Correctly mount the inverter so that it cannot be inadvertently touched.
• Do not touch hot surfaces.
• Wait for 30 minutes for surfaces to cool down after switching the system off.
• Observe the safety messages on the inverter.
• During operation, don't touch any parts other than the display panel of the inverter.

CAUTION

Risk of injury due to weight of the inverter and battery

Injuries may be caused if the product is lifted incorrectly or dropped while being transported or mounted. To avoid this danger:
• Transport and lift the product carefully. Take the weight of the product into account. Use lifting and conveyance aids such as lifting trolleys wherever possible.
• Wear suitable personal protective equipment for all work on the product.

NOTICE

Damage to the inverter and battery due to electrostatic discharge

Touching electronic components can result in electrostatic discharge, which can damage or destroy the inverter and battery. To avoid this:
• Ground yourself before touching any component.

NOTICE

Damage due to cleaning agents or inappropriate cleaning methods

The use of cleaning agents may cause damage to the product and its components. To avoid this:
• Clean the product and all its components only with a cloth moistened with clear water.
• Never clean the unit with a hose or with the use of a water jet.

2.4. Symbols Explanation

Symbols on the type label of the energy storage inverter:

Symbol	Explanation
	Beware of a danger zone This symbol indicates that the product must be additionally grounded if additional grounding or equipotential bonding is required at the installation site.
	Beware of electrical voltage The product operates at high voltages.
	Beware of hot surface The inverter can get hot during operation.
	Danger to life due to high voltages in the inverter, observe a waiting time of 5 minutes. High voltages within the live components of the inverter that can cause lethal electric shocks.Prior to performing any work on the inverter, disconnect it from all voltage sources as described in this document.
	WEEE designation Do not dispose of the product together with the household waste but in accordance with the disposal regulations for electronic waste applicable at the installation site.
	Read the Product documentation
	CE marking The product complies with the requirements of the applicable EU directives.
	Certified safety The product is TUV-tested and complies with the requirements of the EU Equipment and Product Safety Act.
	RCM (Regulatory Compliance Mark) The product complies with the requirements of the applicable Australian standards.
	UKCA marking The product complies with the regulations of the applicable laws of England,Wales and Scotland.

Symbols on the type label and warning label of the battery:

Symbol	Explanation
	Beware of a danger zone This symbol indicates that the battery must be additionally grounded if additional grounding or equipotential bonding is required at the installation site.
	Beware of electrical voltage The product operates at high voltages.
	Risk of chemical burns
	Risk of explosion
	Risk of electrolyte leakage
	Read the Product documentation
	Refer to the instruction for operation Observe all documentations supplied with the product.
	Use eye protection Wear eye protection for all work on the device.
	Fire, naked light and smoking prohibited
	Avoid close proximity. Do not approach the Product unnecessarily.
	Do not short circuit the battery. Touching the short-circuit connection of the battery can result in serious injuries or even death due to electric shock and massive energy release.
	WEEE designation Do not dispose of the battery together with the household waste but in accordance with the disposal regulations for electronic waste applicable at the installation site.

CE	CE marking The product complies with the requirements of the applicable EU directives.
	RCM (Regulatory Compliance Mark) The product complies with the requirements of the applicable Australian standards.
UK CA	UKCA marking The product complies with the regulations of the applicable laws of England,Wales and Scotland.
UN38.3	Marking for transport of dangerous goods The product passes the certifications of the UN38.3.

3. Product Introduction and Application Scenarios

3.1. Naming Convention

SMILE-G3-T10

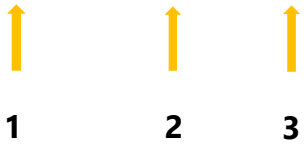

Location	Name	Explanation
1	SMILE	Residential energy storage system
2	G3	3rd Generation of SMILE series
3	T4	**4** kW Inverter with Solar Connections – Three-phase Hybrid energy storage system
	T5	**5** kW Inverter with Solar Connections – Three-phase Hybrid energy storage system
	T6	**6** kW Inverter with Solar Connections – Three-phase Hybrid energy storage system
	T8	**8** kW Inverter with Solar Connections – Three-phase Hybrid energy storage system
	T10	**10** kW Inverter with Solar Connections – Three-phase Hybrid energy storage system

Complete Designation	Designation in This Document
SMILE-G3-T4-INV SMILE-G3-T5-INV SMILE-G3-T6-INV SMILE-G3-T8-INV SMILE-G3-T10-INV	Energy storage inverter
SMILE-G3-BAT-8.2P	Parallel battery
SMILE-G3-BAT-3.6S SMILE-G3-BAT-3.8S SMILE-G3-BAT-4.0S	Series battery
SMILE-G3-T4 SMILE-G3-T5 SMILE-G3-T6 SMILE-G3-T8 SMILE-G3-T10	System/Energy storage system/BESS

3.2. System Introduction

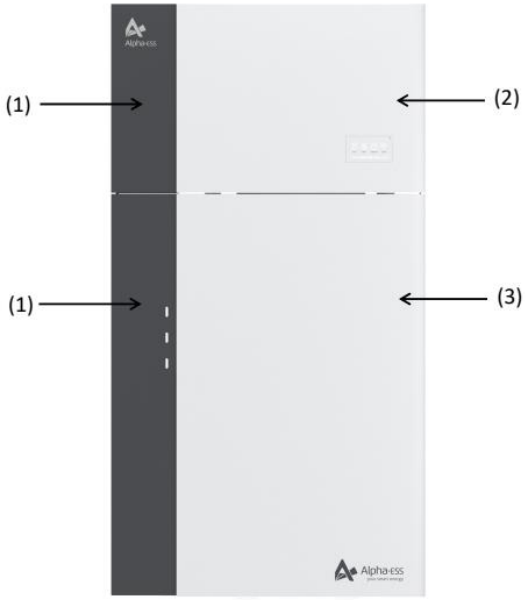

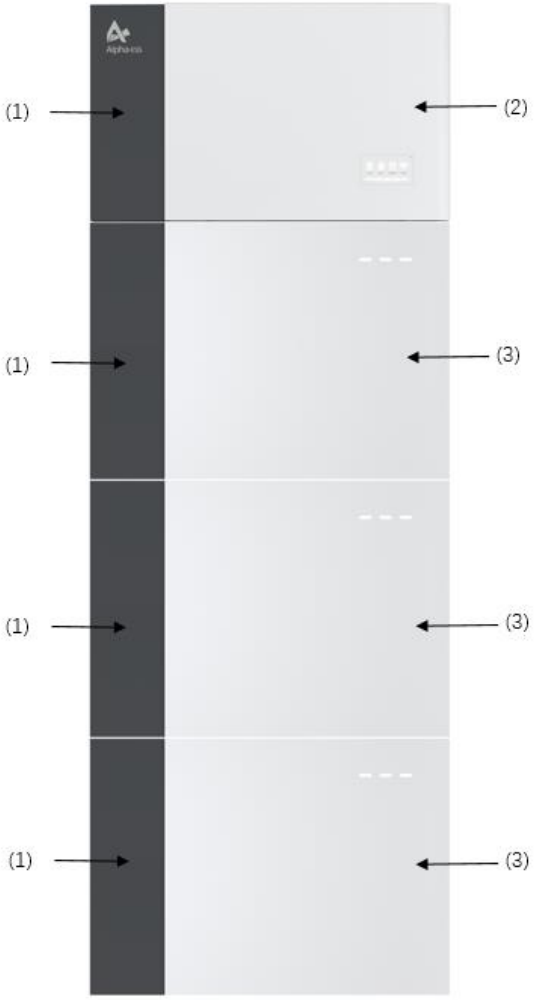

Object	Name	Explanation
1	Cable Cover	Covers for the left wiring area (There are two types of covers, one for the Battery Module(s) wiring and a second for the Inverter connections.)
2	SMILE-G3-T4-INV SMILE-G3-T5-INV SMILE-G3-T6-INV SMILE-G3-T8-INV SMILE-G3-T10-INV	Energy storage inverter
3	SMILE-G3-BAT-8.2P SMILE-G3-BAT-3.6S SMILE-G3-BAT-3.8S SMILE-G3-BAT-4.0S	Battery

3.3. Product Description

3.3.1. Inverter Electrical Interface & Connections Introduction

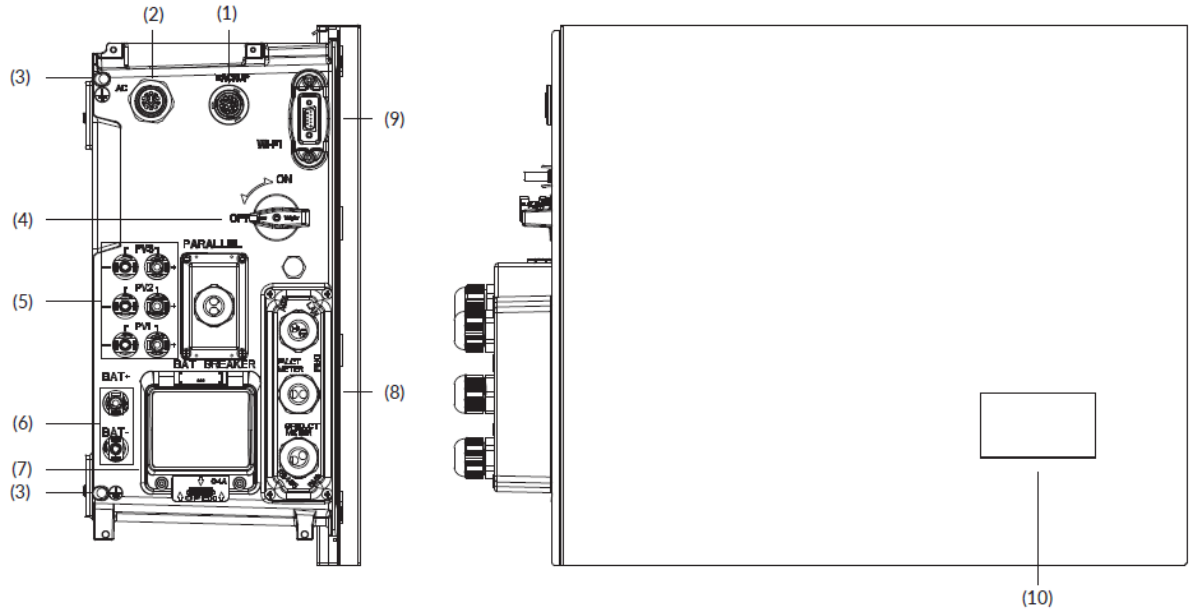

Position	Designation
1	Backup Connector
2	Grid Connector (AC Supply)
3	Grounding Point
4	PV Switch*
5	Positive and Negative PV Connectors, PV1/ PV2, PV3
6	Battery Positive Connector Battery Negative Connector
7	Battery Circuit Breaker*
8	Communication Ports (BMS, RS485, Meter, DRM**&RRCR, LAN, AUX1, AUX2), Refer to Chapter 6.6
9	Wi-Fi Port
10	LED Display

* Battery circuit breaker and PV switch of the inverter are switched off when shipped.

** The DRM is only for regions with AS/NZW 4777.2 safety regulations.

3.3.2. Inverter Display Interface Introduction

LED Display

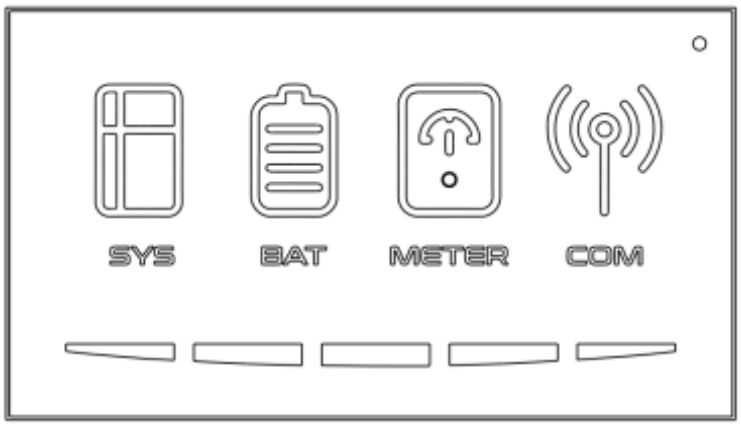

These LED indicators provide information about the operation status of the energy storage system.

Status	Explanation	Status	Explanation
	White light The system works normally		White light The battery works normally
	Red light The system is in fault		No light The battery is in fault
	White light Meter communication works normally		White light Connected to the server
	No light Meter lost		No light Disconnected to the server

The lower five LED indicators provide information about the State of Charge (SOC) of the batteries connected to this energy storage system.

LED Indicator	SOC	Description
LEDs show the SOC of batteries		SOC＜5%
		5%≤SOC＜20%
		20%≤SOC＜40%
		40%≤SOC＜60%
		60%≤SOC＜80%
		80%≤SOC≤100%

Note that the LED lights provide an approximation of the State of Charge and should be read as an indication and not as a set value.

3.3.3. Battery Display Interface Introduction

During normal operation of battery, three LED indicators on the front cover provide information the State of Charge (SOC) of the battery with white lights glowing and off or flashing (0.5s on, 1.5s off).

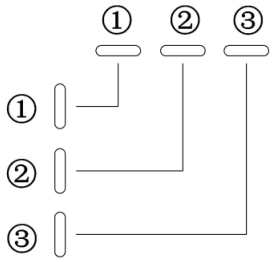

Status	Explanation
	White LED is off.
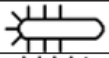	White LED is flashing.
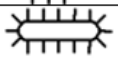	White LED is glowing.

LED Indicator	No.	SOC	Description
LEDs show the SOC status	1	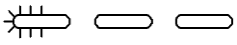	SOC≤10%
	2	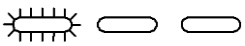	10%＜SOC≤30%
	3	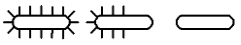	30%＜SOC≤50%
	4	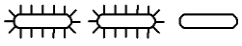	50%＜SOC≤60%
	5	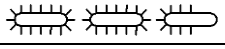	60%＜SOC≤90%
	6	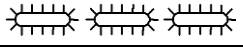	90%＜SOC≤100%

State Display

The LEDs indicate the operating state of the product.

Standby: All white LEDs are flashing (0.5s on and 0.5s off).

Normal: White LEDs are glowing or flashing (0.5s on and 1.5s off).

Protection: Yellow LEDs are glowing or flashing (0.5s on and 0.5s off).*

Error: Yellow LEDs are glowing or flashing (0.5s on and 0.5s off).

Shutdown: All LEDs are off.

*See the Troubleshooting section in section 9.2.3 for more details

3.3.4. Battery Introduction of SMILE-G3-BAT-8.2P

Battery appearance and dimensions

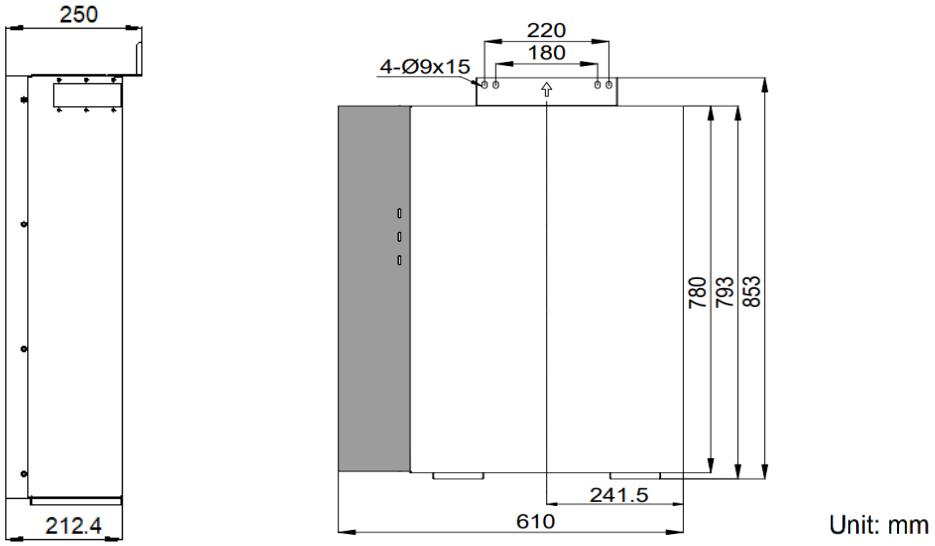

Connection area overview

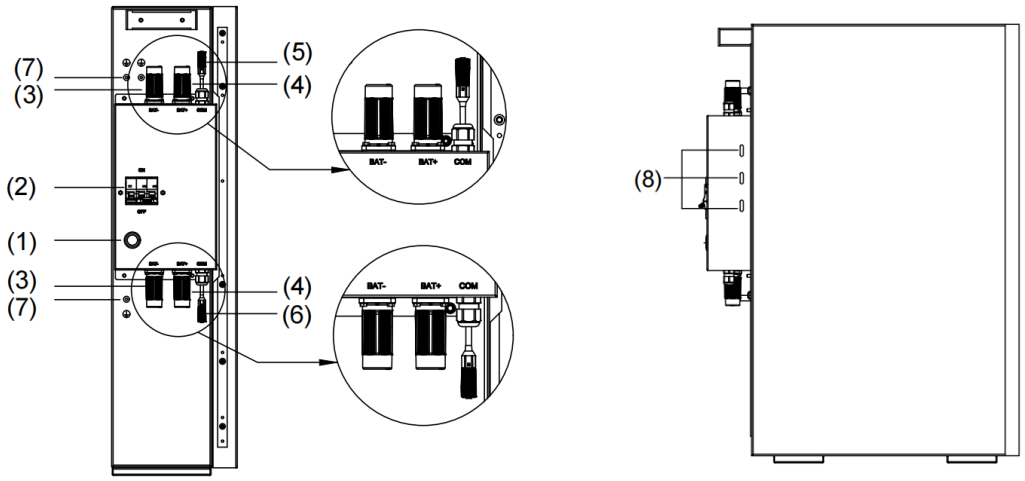

Position	Designation
1	Battery Power Button
2	Battery Circuit Breaker
3	Battery Negative Cable Connector
4	Battery Positive Cable Connector
5	BMS COM1
6	BMS COM2 (with Terminal Resistor)
7	Grounding Point
8	Battery LED Display

3.3.5. Battery Introduction of SMILE-G3-BAT-3.6S/4.0S

Battery appearance and dimensions

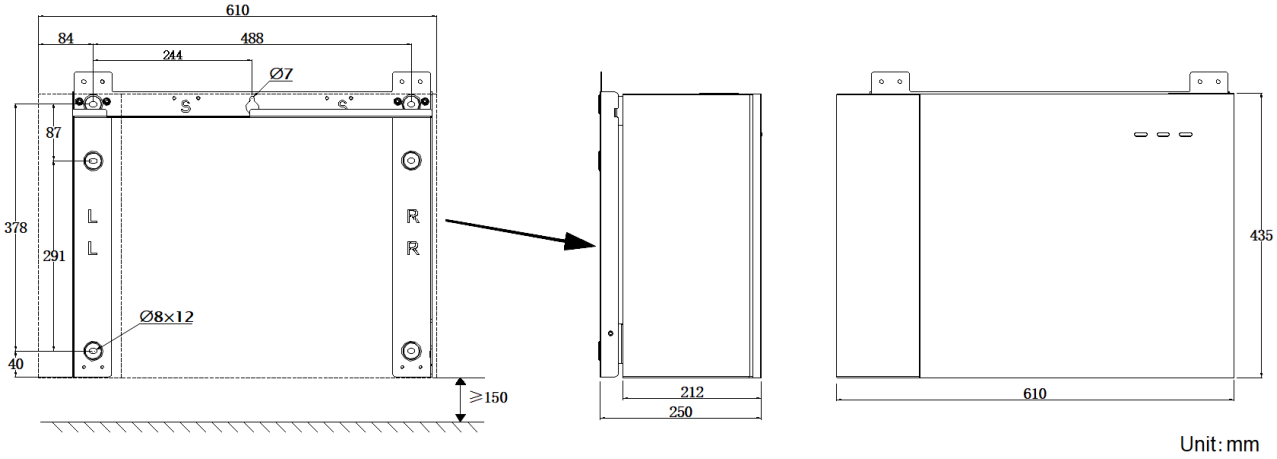

Connection area overview

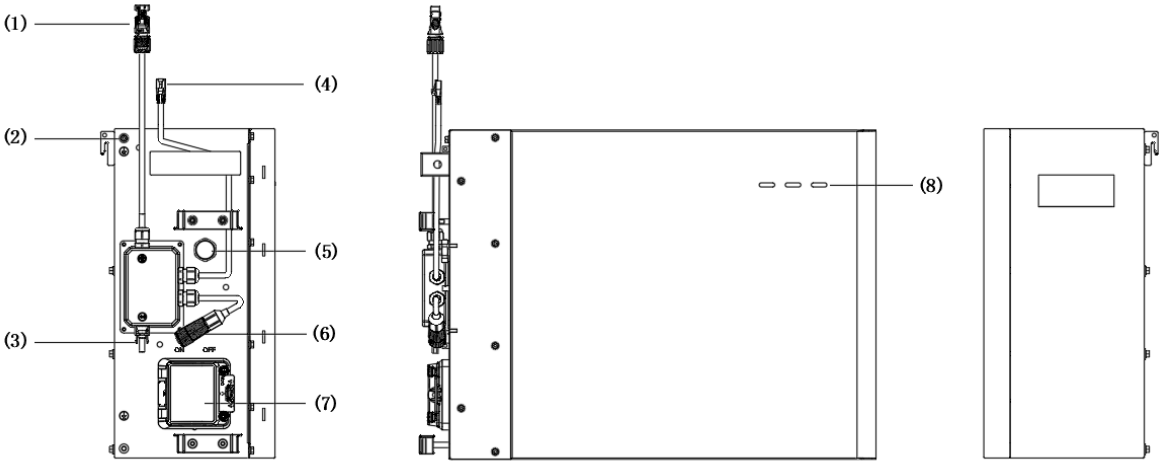

Position	Designation
1	Battery Positive Cable Connector
2	Grounding Point
3	Battery Negative Cable Connector
4	BMS COM1
5	Pressure Relief Valve
6	BMS COM2 (with Terminal Resistor)
7	Battery Circuit Breaker
8	LED Display

3.3.6. Battery Introduction of SMILE-G3-BAT-3.8S

Battery appearance and dimensions

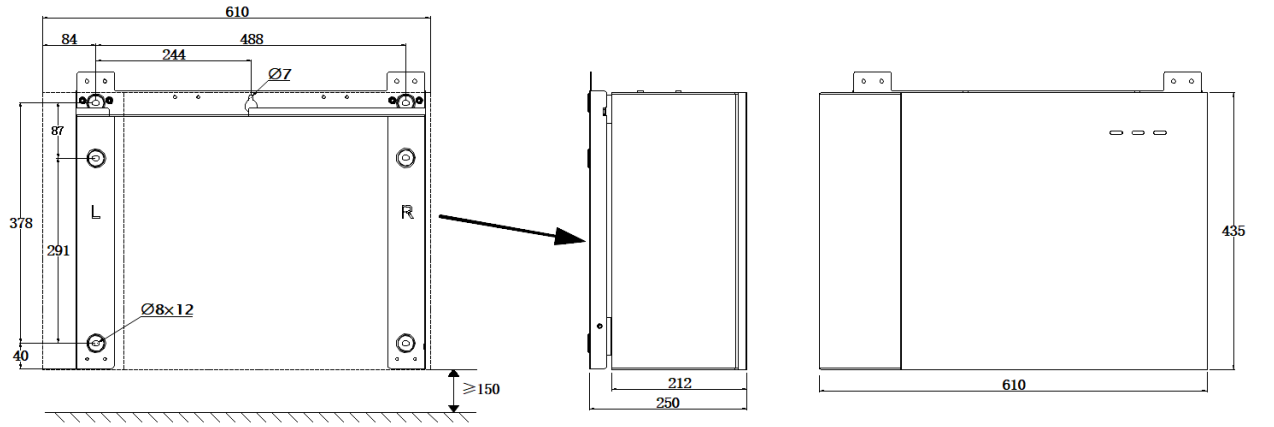

Unit:mm

Connection area overview

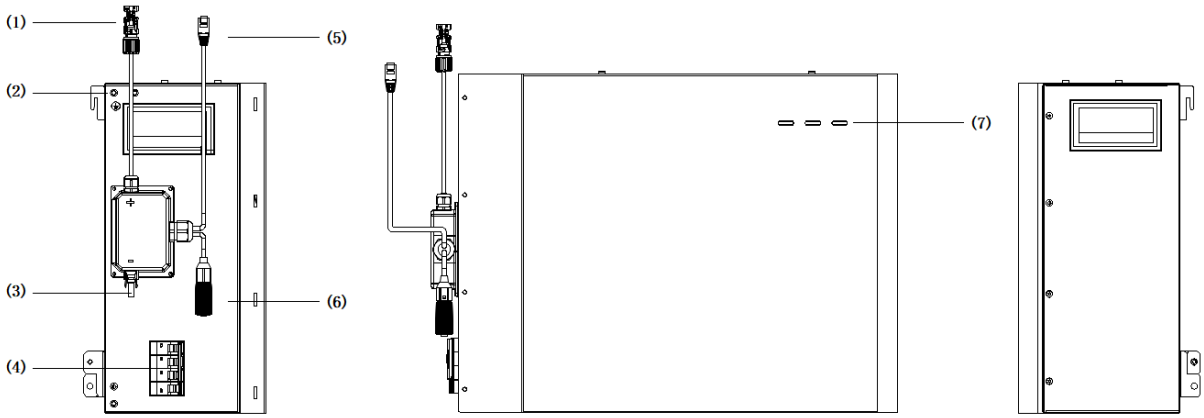

Position	Designation
1	Battery Positive Cable Connector
2	Grounding Point
3	Battery Negative Cable Connector
4	Battery Circuit Breaker
5	BMS COM1
6	BMS COM2 (with Terminal Resistor)
7	Battery LED Display

3.4. Application Scenarios

SMILE-G3 three phase system (includes inverter SMILE-G3-T4/T5/T6/T8/T10-INV, battery SMILE-G3-BAT-8.2P and SMILE-G3-BAT-3.6S/3.8S/4.0S) can be connected as a DC-Coupled systems (mostly new installation), AC-Coupled systems (mostly retrofit), Hybrid-Coupled systems (mostly retrofit, and increase the PV capacity), and Off-Grid (under development) systems as shown in the following diagrams:

3.4.1. DC-Coupled Energy Storage System

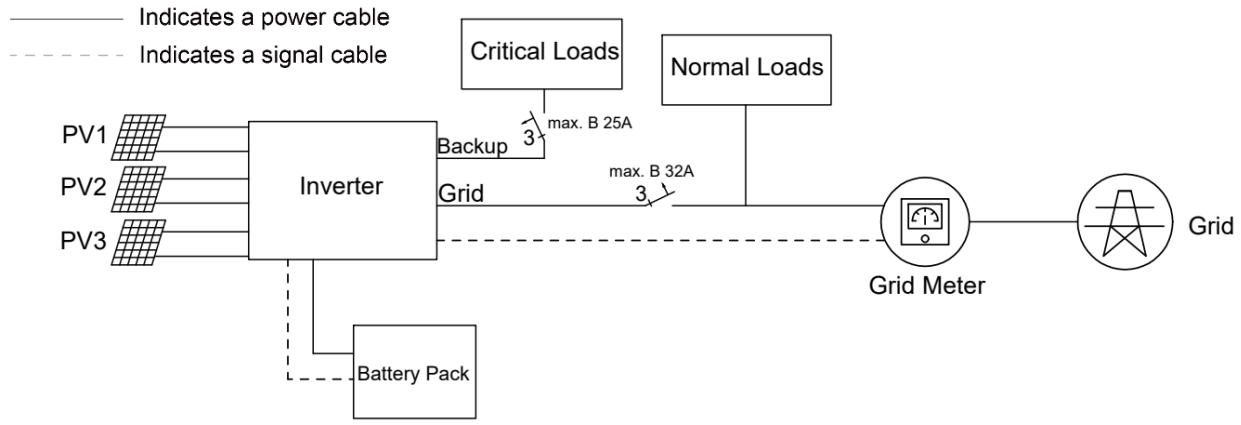

DC-Coupled Energy Storage System – Scheme

3.4.2. AC-Coupled Energy Storage System

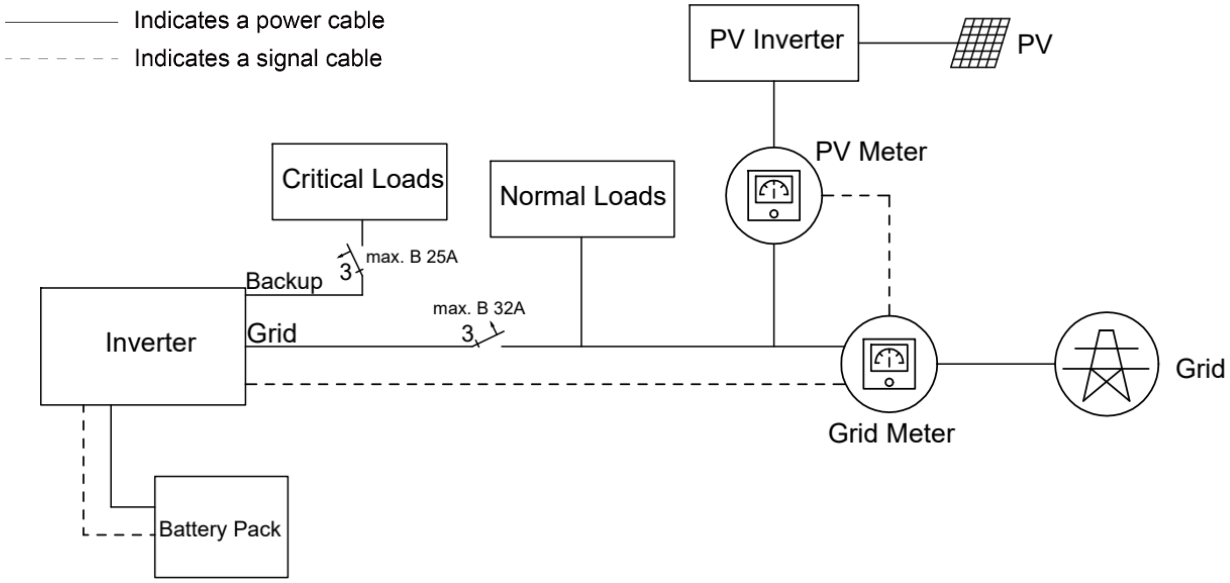

AC-Coupled Energy Storage System – Scheme

3.4.3. Hybrid-Coupled Energy Storage System

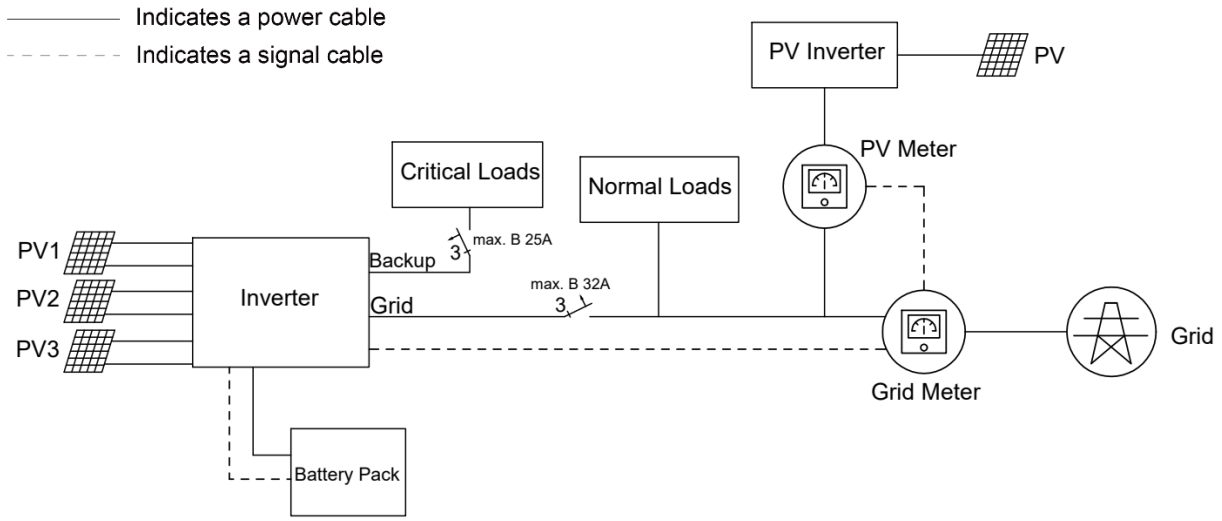

Hybrid-Coupled Energy Storage System – Scheme

3.4.4. Off-Grid Energy Storage System

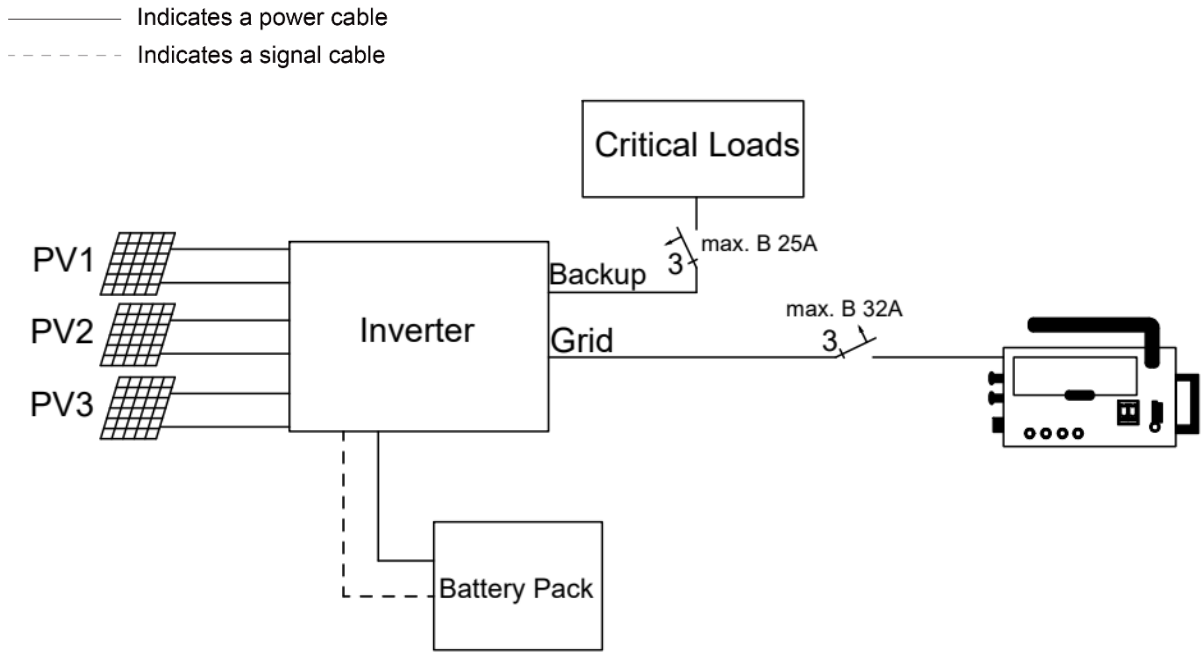

Off-Grid Energy Storage System (with Diesel Generator) – Scheme

NOTES: In all cases, Normal Loads and Essential Loads must be appropriately protected by earth fault protection devices (e.g. Type A or Type B RCDs, RCBOs) in accordance with appropriate Standards.

Backup/Essential Loads should not exceed the rated capacity of the inverter, even during on-grid operation.

4. Storage and Transport

4.1. Storage

4.1.1. Inverter Storage

The following requirements should be met if the inverter is not put into immediate use:

1. Do not unpack the inverter.
2. Keep the storage temperature at -40~60°C and the humidity at 5%~95% RH.
3. The inverter should be stored in a clean and dry place and be protected from dust and water vapor corrosion.
4. A maximum of six inverters can be stacked. To avoid personal injury or device damage, stack inverters with caution to prevent them from falling over.
5. During the storage period, check the inverter periodically. Replace any damaged packaging promptly.
6. The inverters stored for more than 2 years should be inspected and tested before being put into service.

4.1.2. Battery Storage

The following requirements should be met if the battery is not put into immediate use:

7. Place batteries according to the signs on the carton during storage.
8. Stack battery cartons in accordance with the stacking requirements printed on the external carton.
9. Store the battery out of reach of children and animals.
10. Store the battery in an area where there is minimal dust and dirt.
11. Handle batteries with care to avoid damage.

1. The requirements for the storage environment are as follows:
   a. Ambient temperature: -10~55°C, recommended storage temperature: 15~30°C
   b. Relative humidity: 15%~85%
   c. Place batteries in a dry, clean, ventilated location free from dust.
   d. Store batteries in a place that is away from corrosive organic solvents and gases.
   e. Keep batteries away from direct sunlight.
   f. Keep batteries at least 2 meters away from heat sources.
2. The batteries in storage must be disconnected from external devices and the indicators (if any) on the batteries should be off.
3. Warehoused batteries should be delivered based on the "first in, first out" stock control.

4. The warehouse keeper should collect battery storage information every month and report to the planning department. Batteries stored for more than 6 months should be assessed and charged periodically.
5. Capacity loss may occur if a lithium battery is stored for a long time. After a lithium battery is stored for 12 months in the recommended storage temperature, the irreversible capacity loss rate is 3%~10%. It is recommended that batteries not be stored for a long period. If the batteries need to be stored for more than 6 months, it is recommended to recharge the batteries to 65~75% of the SOC.

4.2. Transport

During transportation, please follow these guidelines:

6. Use the original packaging for transportation. If the original packaging is not available, place the product inside a suitable cardboard box with adequate protection and seal the carton.
7. Handle with care, choose the corresponding handling method according to the weight, and pay attention to safety. Mechanical aids should always be used in preference to lifting by hand.



< 18 kg 18-32 kg 32-55 kg > 55 kg

8. Keep the packaging dry and away from potential sources of damage during transportation.
9. Secure the Product during transportation to prevent falling or mechanical impact.

5. Mounting

5.1. Checking the Outer Packaging

Before unpacking the product, check the outer packaging for damage, such as holes, signs of mechanical damage or water damage. If any damage is found, do not unpack the product and contact your dealer as soon as possible.

5.2. Scope of Delivery

Check the scope of delivery and inspect components to ensure they are present and undamaged.
Contact your distributor if the packed components are incomplete or damaged.

SMILE-G3 Three Phase Inverter				
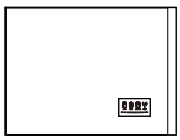		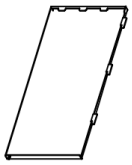	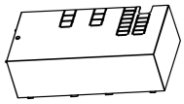	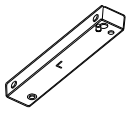
Inverter (×1)	TOP Cover (×1)	Right Cover (×1)	Cable Cover (×1)	Left Support Foot (×1)
	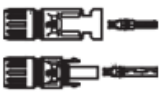	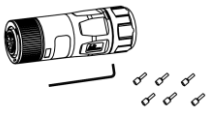	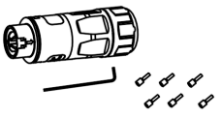	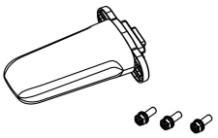
Right Support Foot (×1)	PV+ & PV- Connectors (×3)	Grid Connector (×1)	Backup Connector (×1)	Wi-Fi Module (×1)
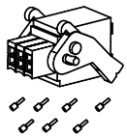		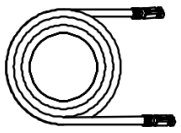		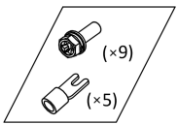
6 Pin AUX Terminal Block (×2)	Grounding Cable Between INV and 1st Battery (X1)	Series Battery Main Negative Power Cable (×1)	Series Battery Main Positive Power Cable (×1)	Hexagon Head Screws M5X12 and Terminals OT16-5 Set (×1)
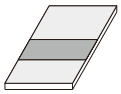	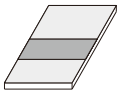			
Quick Installation Guide（×1）	System Wiring Diagram （×1）	PV&BAT Connector Disassembling Tool (×1)		

(Optional) Wall Bracket of SMILE-G3 Three Phase Inverter			
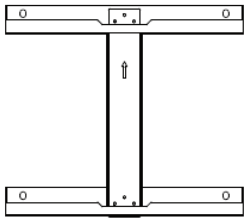	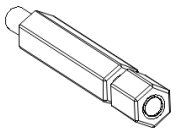	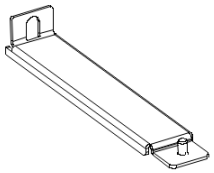	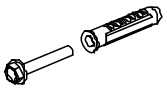
Wall Bracket (×1)	Support Stud for Right Cover (×1)	Support Plate for Left Cable Cover (×1)	Wall Anchor ST6*55 (×4)
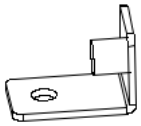	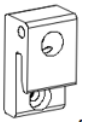		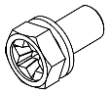
Support plate for right cover (×1)	Hooks for Wall Bracket (×4)	Screw M4*10 (×2)	Hexagon Head Screw M5*12 (×8)
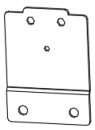	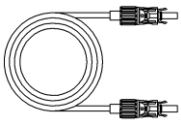	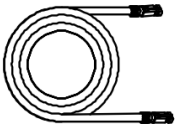	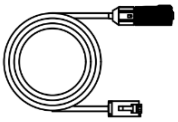
Connector for Wall Brackets* (×2)	Series Battery Main Positive Power Cable (×1)	Series Battery Main Negative Power Cable (×1)	Communication Cable Between Inverter and 1st Series Batteries(×1)

* For 'battery ready' application, connection between the wall bracket of SMILE-G3-T4/T5/T6/T8/T10-INV and the first wall bracket of SMILE-G3-AT-3.6S&4.0S

(Optional) Cables for Distanced Horizontal Battery Expansion of SMILE-G3-BAT-3.6S/3.8S/4.0S		
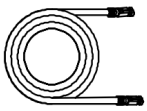	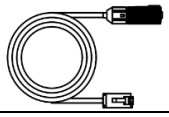	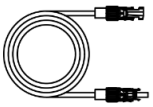
Series Battery Main Negative Power Cable (×1)	Communication Cable Between Two Column Series Batteries (×1)	Power Cable Between Two Column Series Batteries (×1)
	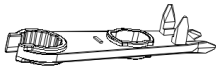	
M5 Y Type Terminal (×3)	PV&BAT Connector Disassembling Tool (×1)	

SMILE-G3-BAT-8.2P			
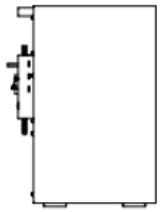	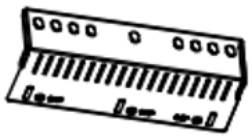		
Battery (×1)	Top Wall Bracket (×1)	Battery Cable Cover (×1)	M5 Y Type Terminal (×2)
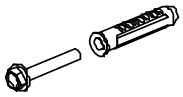	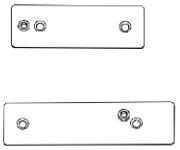	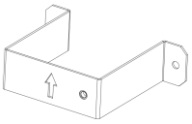	
Wall Anchor ST6*55 (×4)	Gap Gasket for Battery Stacking (×2)	Support for Battery Cable Cover (×1)	Battery Communication Cable (×1)
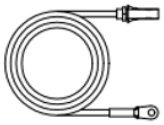	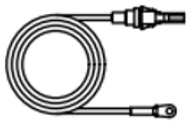	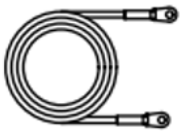	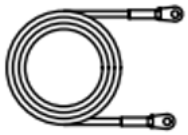
Battery - Power Cable *(×1)	Battery + Power Cable* (×1)	BAT+ Power Cable**(×1)	BAT- Power Cable**(×1)
			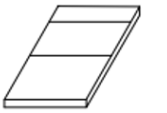
Wall Gap Shim (×1)	Back Support Stud for Battery (×1)	Countersunk Screw M5*10 (×18)	Quick Installation Guide (×1)

* For connecting with SMILE-G3-T4/T5/T6/T8/T10-INV

**For connecting with SMILE-G3-T12/T15/T20-INV, also suitable for connecting with battery SMILE-G3-BAT-8.2P expansion installation

SMILE-G3-BAT-3.6S/4.0S			
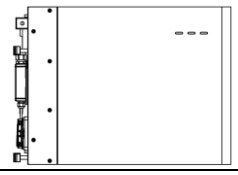		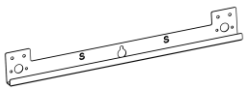	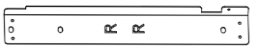
Battery (×1)	Battery Cable Cover (×1)	Top Beam of Wall Bracket (×1)	Right Beam of Wall Bracket (×1)
	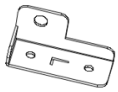		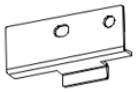
Left Beam of Wall Bracket (×1)	Left Holder for Wall Bracket (×1)	Right Holder for Wall Bracket (×1)	Grounding Bar (×1)
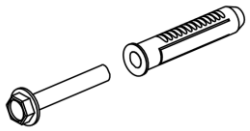	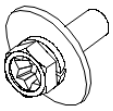		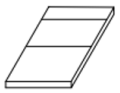
Wall Anchor ST6*55 (×6)	Hexagon Head Large Washer Screw M5*12 (×7)	Flange Nut M4 (×7)	Quick Installation Guide (×1)

SMILE-G3-BAT-3.8S			
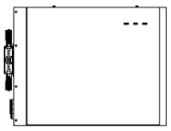	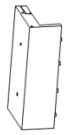	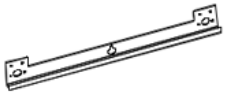	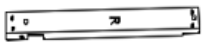
Battery (×1)	Battery Cable Cover (×1)	Top Beam of Wall Bracket (×1)	Right Beam of Wall Bracket (×1)
	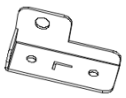		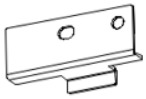
Left Beam of Wall Bracket (×1)	Left Holder for Wall Bracket (×1)	Right Holder for Wall Bracket (×1)	Grounding Bar (×1)
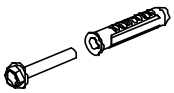			
Wall Anchor ST6*55 (×6)	Support Stud for Battery Cable Cover (×2)	Hexagon Head Large Washer Screw M5*12 (×7)	Flange Nut M5 (×7)
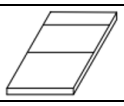			
Quick Installation Guide (×1)			

Accessories for Battery Base of SMILE-G3-BAT-3.6S/3.8S/4.0S *			
	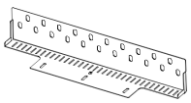	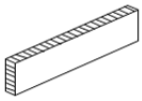	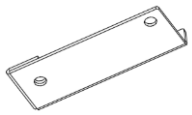
Battery Base (×1)	Top Wall Bracket (×1)	Position Plate (×1)	Right Connection Plate***** (×4)
	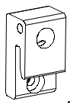	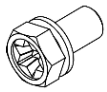	
Hexagon Head Limit Screw***** M5*10 (×10)	Right Connection Block for Battery Base (×1)	Hexagon Head Screw M5*12 (×20)	Z-Shaped Right Connection Plate** (×6)
			
Pan Head Screw M5*10****** (×13)	Limit block*** (×10)		

* Battery Base is optional

** Only for SMILE-G3-BAT-3.8S

*** Only for SMILE-G3-BAT-3.6S&4.0S

5.3. Requirements for Mounting

DANGER

Danger to life due to fire or explosion

Despite careful construction, electrical devices can cause fires.

- Do not mount the energy storage system in areas containing highly flammable materials or gases.
- Do not mount the energy storage system in potentially explosive atmospheres.

5.3.1. Basic Requirements

- SMILE-G3-T4/T5/T6/T8/T10-INV and SMILE-G3-BAT-3.6S/4.0S are suitable for indoor and outdoor installation.

SMILE-G3-BAT-8.2P/3.8S are only suitable for indoor installation.

- Do not install the inverter in a place where people can easily touch it because the inverter's surface will get extremely hot during operation. Do not install the inverter at a place within the reach of children.
- Do not engage screws into the threaded holes using a Hammer Driver, Impact Driver or "Rattle gun". Do not damage screws or threaded holes by tightening with too much torque.

5.3.2. Mounting Environment Requirements

- The system must be mounted in a well-ventilated environment to ensure adequate heat dissipation.
- Do not mount in a location that will be exposed to direct sunlight. Mount the system in a sheltered place or mount an awning over it. When mounted under direct sunlight, the power of the system may be derated due to additional temperature rise and the longevity of the product will be reduced.
- The optimal temperature range for the battery to operate is 15 to 30℃.
- Favour locations that are indoors, under cover, or generally protected from the elements and extreme temperatures (e.g. in a garage). If the battery is mounted in the garage, ensure the product is adequately protected from potential mechanical impact.
- Do not place the system near water sources such as downpipes or sprinklers.
- The indoor version of the system must be installed in an environment with a relative humidity of no more than 90% (no condensation).
- The system should not be installed in locations that are higher than 3000 meters above sea level.
- The system should not be installed in places with flammable materials, gases, or explosive atmospheres.

5.3.3. Mounting Structure Requirements

- The surface to which the batteries is to be mounted shall be fire-rated where required by local regulations.
- Out of an abundance of caution, it is recommended that the system be mounted on non-flammable building materials, even when not required by local regulations.
- Ensure that the mounting surface is sufficiently sturdy to bear the weight of the product.
- In residential installation, do not mount the system on drywalls or walls made of gyprock or similar materials with poor sound insulation. The noises generated by the inverter can be noticeable and may be exacerbated by locations with poor insulation or where echoing may occur.

5.3.4. Mounting Angle and Stack Requirement

The parallel battery should be placed on the ground and secured to the wall.
The inverter should be placed on the top of the battery and secured to the battery.
The installation angle requirement is as follows:

- Do not mount the inverter at forward-tilted, side-tilted, horizontal, or inverted positions.

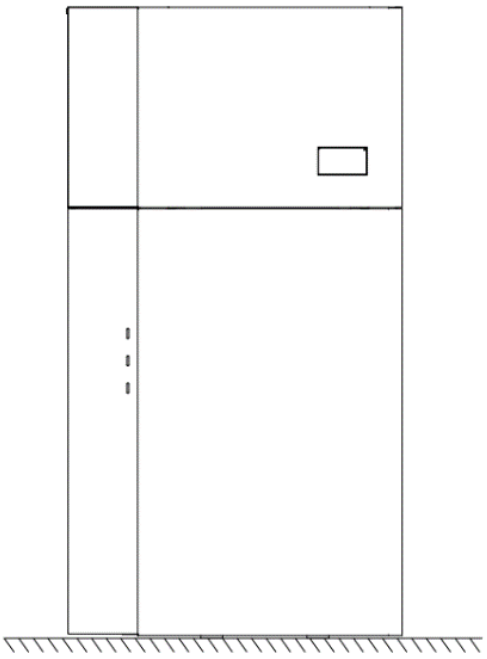

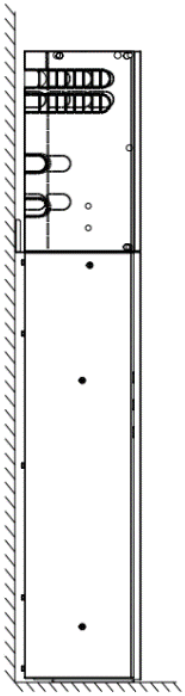

5.3.5. Mounting Space Requirements

- Reserve sufficient space around the energy storage system to ensure sufficient space for installation, maintenance and heat dissipation.
- The side clearance is a recommendation which can be adjusted according to the end users' requirements.

In Australia, according to ASNZ5139-2019-4.2.2.2, the non-combustible material needs to be placed between the wall and the battery unit and must extend 600mm to the left and right of the battery and 900mm above it.

Recommended clearances for SMILE-G3-BAT-8.2P.

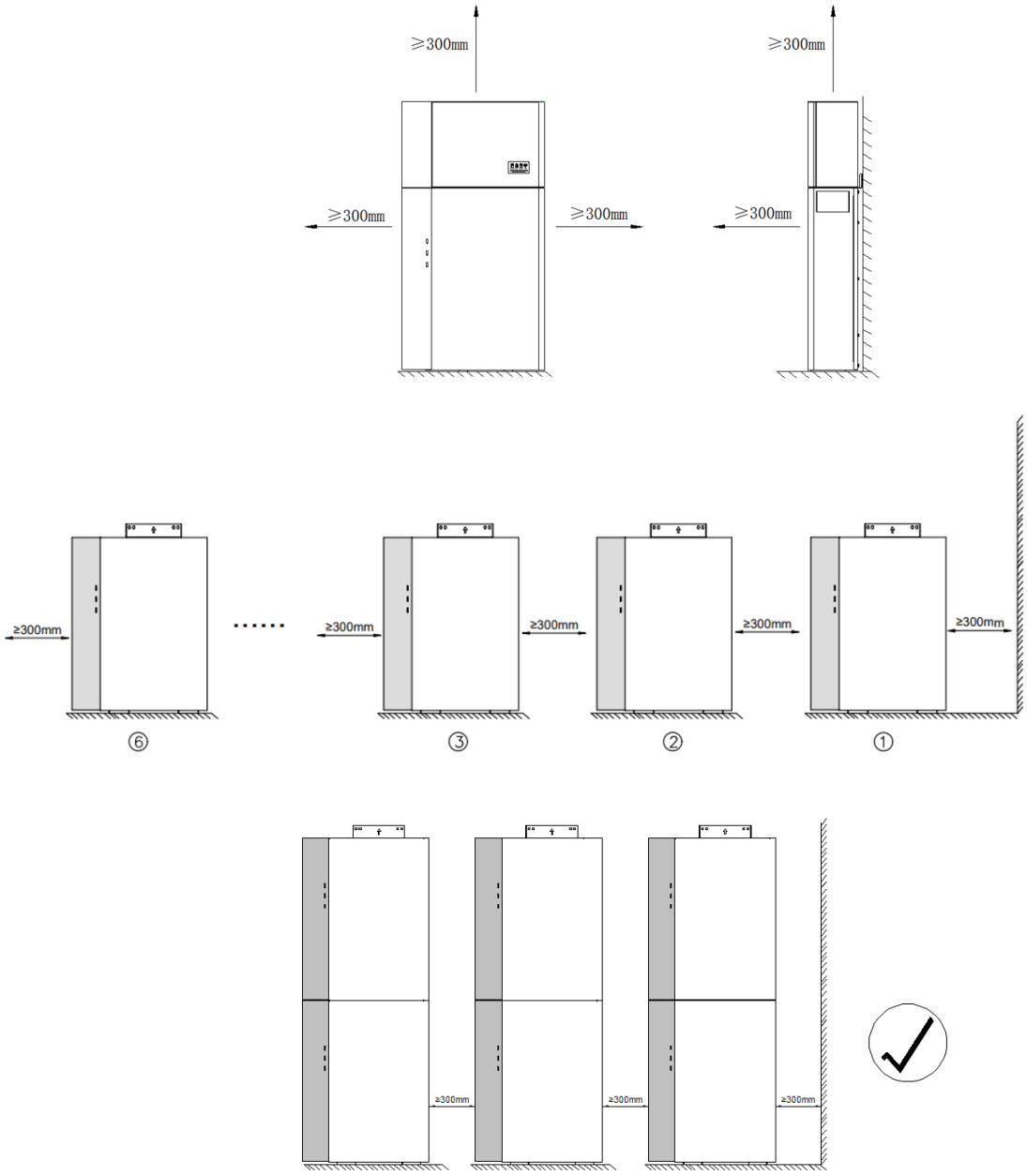

Recommended clearances for series batteries SMILE-G3-BAT-3.6S/3.8S/4.0S.
It's advisable to keep the series batteries at least 150mm off the ground to protect them from submergence. They should be mounted on a battery base or using a wall bracket.

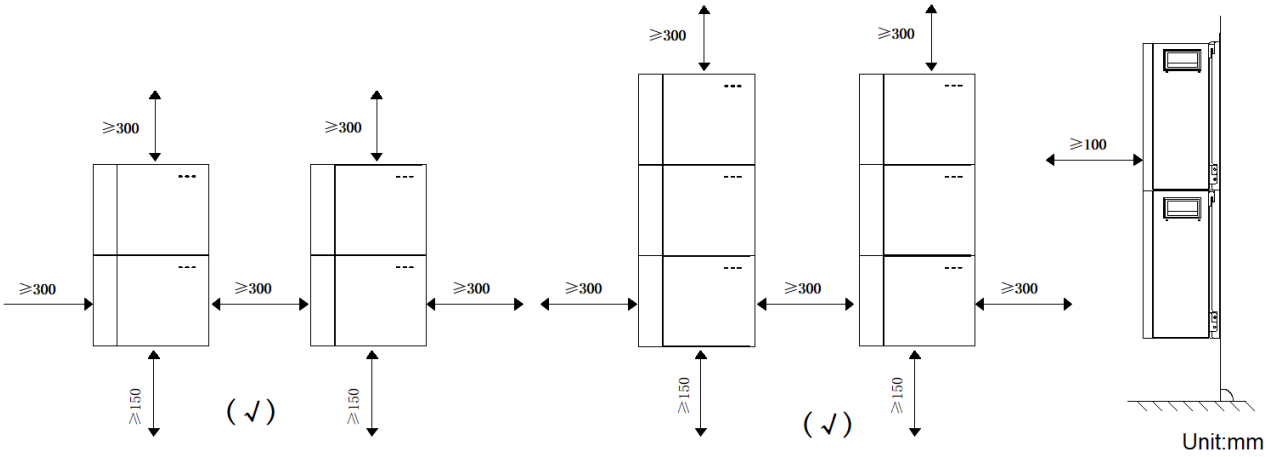

Local standards may add additional clearance requirements, particularly regarding clearances between the Battery System and other Electrical Appliances.

5.4. Preparing Tools and Instruments

Category	Tools and Instruments		
Installation			
	Hammer drill (with a Φ10 mm drill bit)	Socket wrench SW8&SW10	Multimeter (DC voltage range ≥ 1000 V DC)
	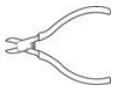	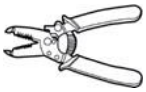	
	Diagonal pliers	Wire stripper	T20/PH2 screwdriver (torque range: 0~5 Nm), L=150mm
			
	Rubber mallet	Utility knife	Cable cutter
			
	Crimping tool (model: PV-CZM-22100)	Bootlace/Ferrule terminal crimper	Disassembly and assembly tool of PV and BAT connector
			
	Vacuum cleaner	Heat shrink tubing	Heat gun
			
	Marker	Measuring tape	Spirit level
Personal Protective Equipment			
	Safety gloves	Safety goggles	Anti-dust respirator
			
	Safety shoes		

5.5. Mounting the System

5.5.1. Mounting the Parallel Battery

Mounting steps for battery SMILE-G3-BAT-8.2P, please follow the below steps.
a. Remove the battery from the carton and transport it to the installation site with a trolley or other manual handling aid capable of safely moving the product weight.
Secure the product during any movement or transport.
b. Secure the provided back support stud to the right lower corner of the battery back (tool: Socket wrench SW8, torque: 2.5Nm).
Place the battery against the wall at the required final position. The battery should be level (check with spirit level) before marking the holes in the wall. Where the ground requires levelling beneath the battery, or where the battery is to be mounted on a sub-surface designed to provide level mounting, the levelling surface should be secure and solid (if using a cement pad) before locating the battery and marking the wall for the mounting positions.
c. Pre-mount the top wall bracket to the battery top and mark the drilling positions.
Remove the top wall bracket and cover the top of the battery with a plastic bag.
Then drill 3 holes on the wall with drill Φ10 and a depth of about 70mm.
Clean the holes and insert screw anchors into the drilling holes.
After removing the plastic bag, fix the top wall bracket on top of the battery (tool: T20 screwdriver, torque: 2.5Nm), secure the top wall bracket to the wall using the provided screws (tool: Socket wrench SW8, torque: 6Nm).
d. Take out the support for battery cable cover from the battery package and tighten it to the lower left of the battery housing with countersunk head screws M5X10 (tool: T20 screwdriver, torque: 2.5Nm).
e. If you want to mount additional batteries side by side, please repeat the mounting steps from a to d.
f. If you want to add another battery on top of the first battery, take out the 2 gap gaskets for battery stacking, 4 countersunk head screws M5X10, and tighten them (tool: T20 screwdriver, torque: 2.5Nm) to the top of the bottom battery.
g. Remove another battery from the carton and transport it to the installation site. Place a PE bag at the bottom of the battery before laying it down, then remove the 2 feet located at the bottom of the battery (tool: T20 screwdriver).
h. Hold the side handles, lift the battery onto the bottom battery, and align the battery's outer contour.
i. Repeat the mounting steps from b to d.
If two batteries are not aligned perfectly due to uneven wall, please put provided wall gap shim behind the top wall bracket of the upper battery.

The first Battery Stacking Installation

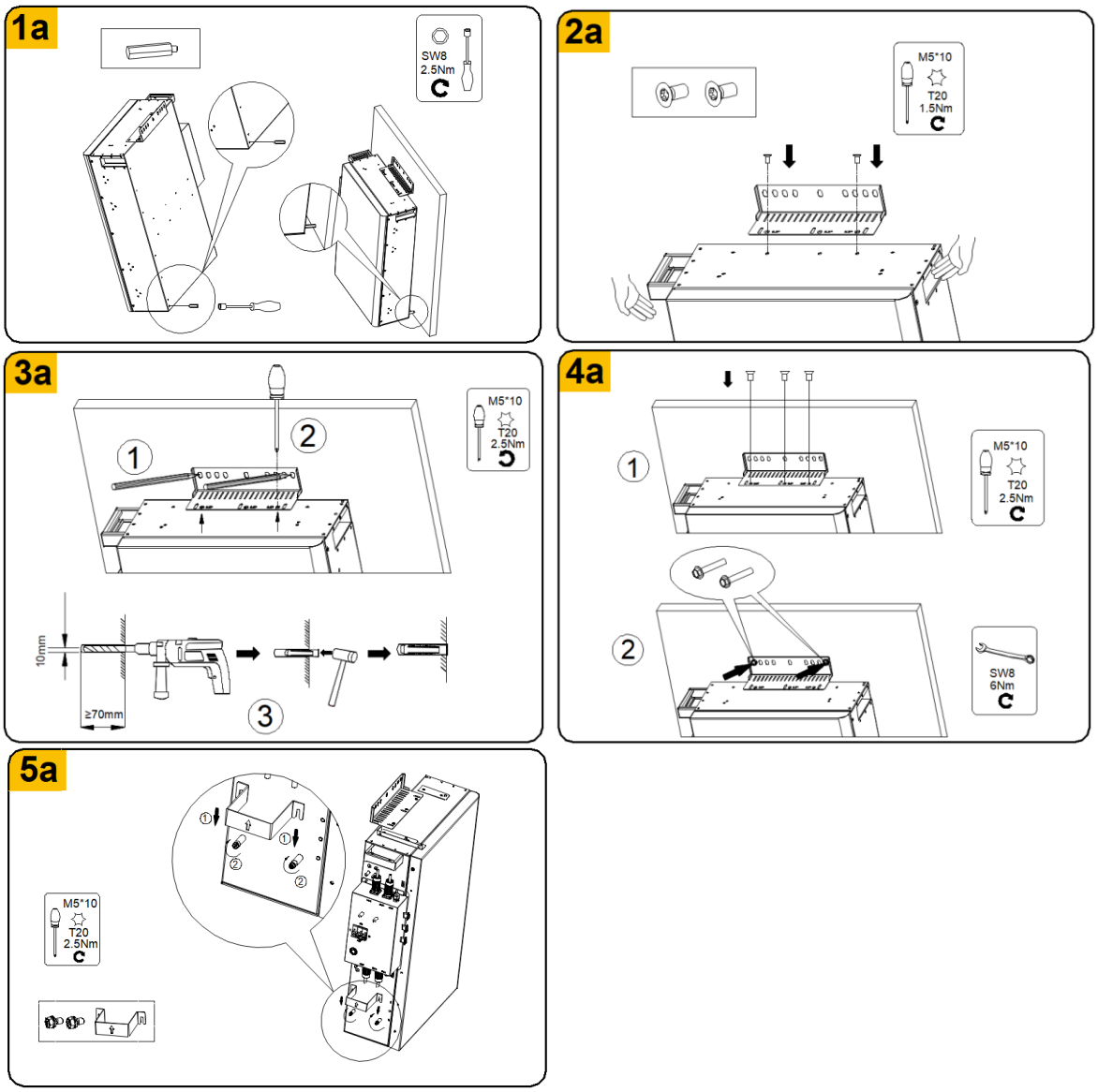

Battery Stacking Installation

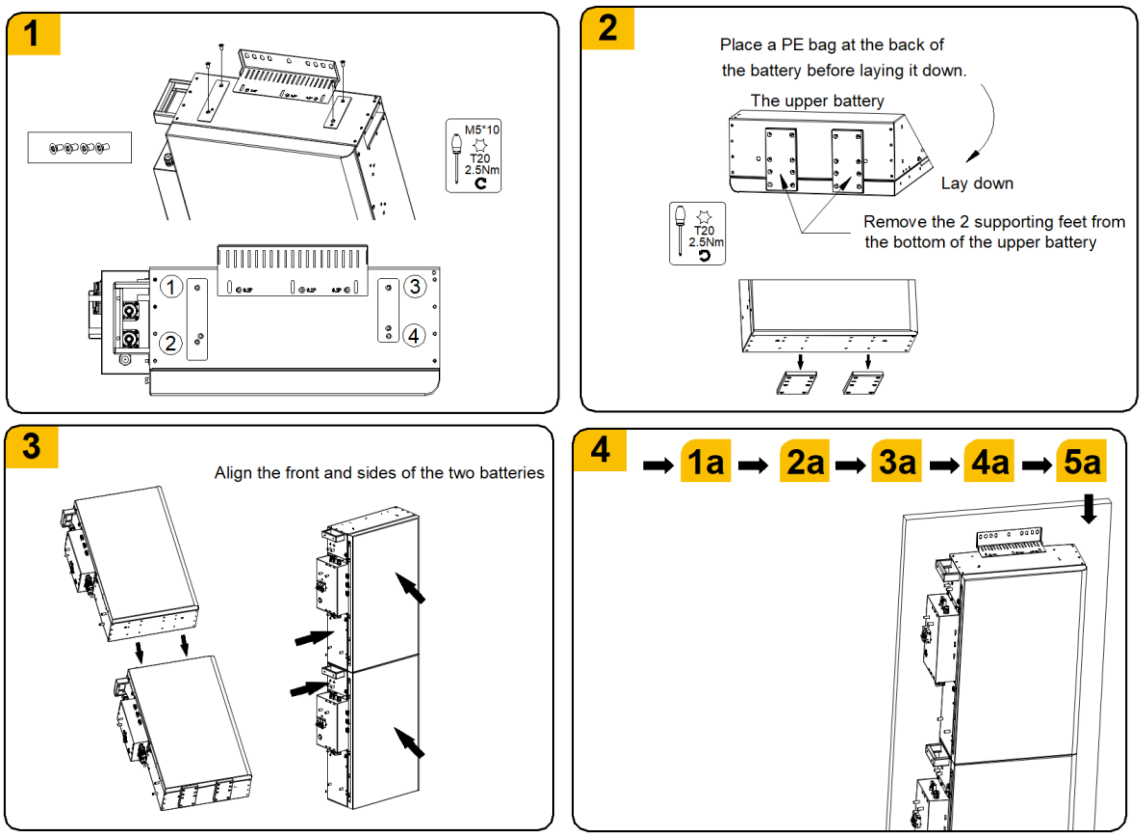

5.5.2. Mounting the Series Battery

Wall Bracket Installation for one Battery Installation

Wall bracket installation for one battery installation, please follow the below steps.

a. Take out the top, left and right beams of the wall bracket from the package and assemble them with M5 nuts (tool: Socket wrench SW8, torque: 2.5Nm).

b. Select a suitable height for the wall bracket location. Please reserve enough height if you want to add more batteries later.

Mark one drilling position which is used to secure the upper middle location of the wall bracket later and drill the marked hole with a Φ10 drill. Insert the screw anchor into the drill hole, and pre-tighten the wall bracket horizontally with the provided screw (tool: Socket wrench SW8, torque: 4Nm). Retain 5~10mm from the screw head to the wall.

c. Hang the wall bracket on the screw head, adjust its horizontal position, then mark the other drilling positions, drill the marked holes with a Φ10 drill and insert the screw anchors into the drill holes.

d. Secure the wall bracket to the wall (tool: Socket wrench SW8, torque: 6Nm).

e. Take out the left holder and right holder for wall bracket from the package and tighten them to the lower left and lower right of the battery back (tool: T20 screwdriver, torque: 2.5Nm).

f. Horizontally lift the battery using the handles at two sides and let the top hooks on the back of the battery slide from right to left in the upper beam of the wall bracket.

g. Secure the battery to the wall bracket and tighten them with two M5*12 screws (tool: T20 screwdriver, torque: 2.5Nm).

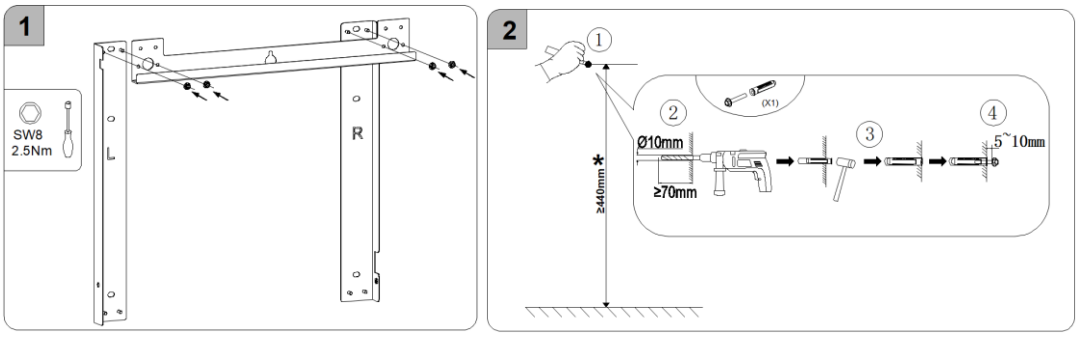

* This recommended value “440mm” is for wall bracket location of the bottom battery. Depending on the number of expansion batteries mounted later, meanwhile it is advisable to have a minimum of 150~200mm off the ground to protect the system from submergence.

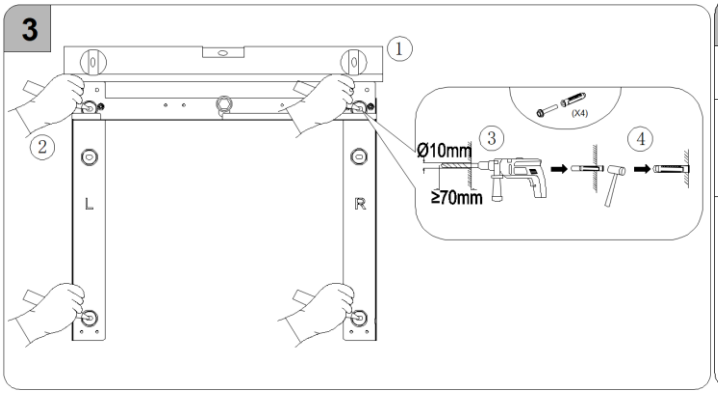
3
1
2
L
R
(X4)
Ø10mm
3
4
≥70mm

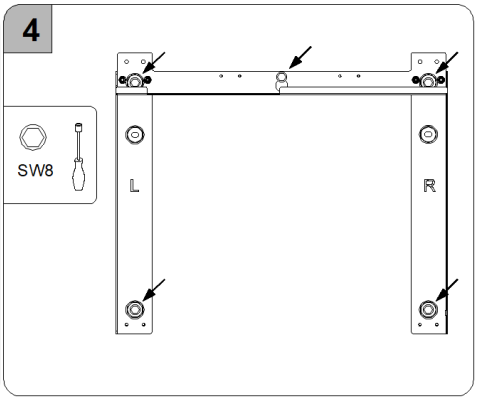
4
SW8
L
R

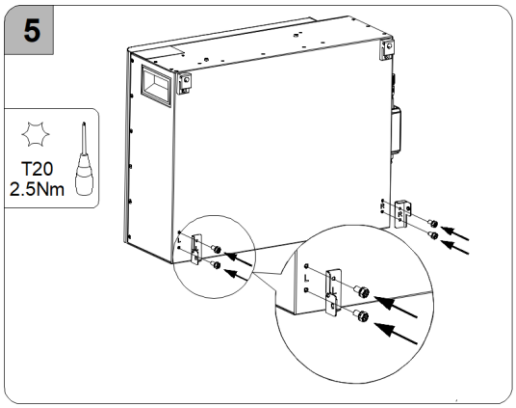
5
T20
2.5Nm

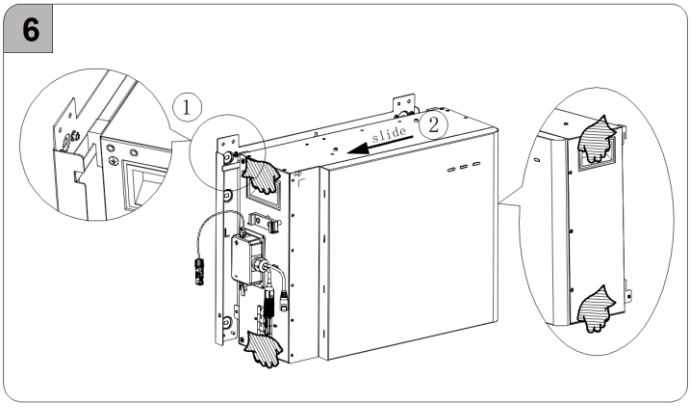
6
1
slide
2

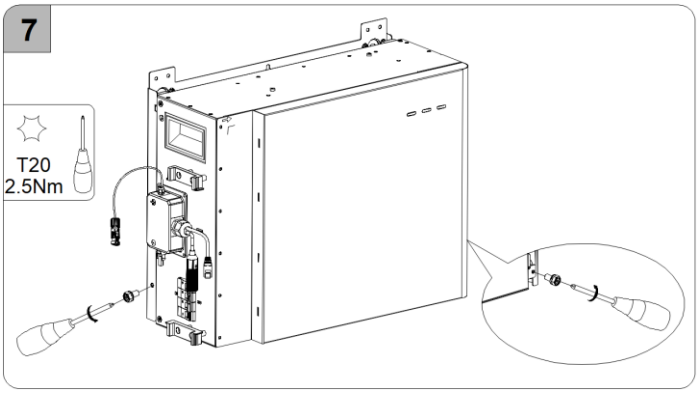
7
T20
2.5Nm

Wall Bracket Installation for Multiple Batteries Installation

When mounting multiple series batteries with wall brackets for the first time, please follow the below steps.

a. Take out the top, left and right beams of the wall bracket from the package, and assemble them with M5 nuts (tool: Socket wrench SW8, torque: 2.5Nm).

Align the upper holes of the lower wall bracket to the lower rivets of the upper wall bracket, assemble them with M5 nuts (tool: Socket wrench SW8, torque: 2.5Nm), and then combine several wall brackets into a whole.

b. For other mounting steps, please see Chapter 5.5.2.1 Wall Bracket Installation for one Battery Installation and follow step b to step g.

c. Take out the grounding bar from the package and use it to connect the lower left corner of the upper battery and the upper left corner of the lower battery (tool: T20 screwdriver, torque: 2.5Nm). When doing so, unscrew the two screws before connecting the grounding bar.

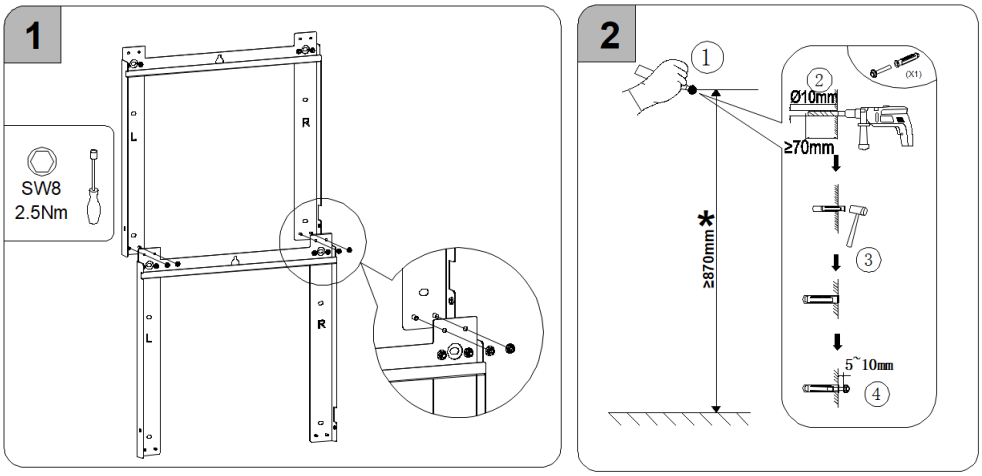

* This recommended value “870mm” is for wall bracket location of the second battery seeing from the bottom up. This value may adjust depending on the number of expansion series batteries mounted later.

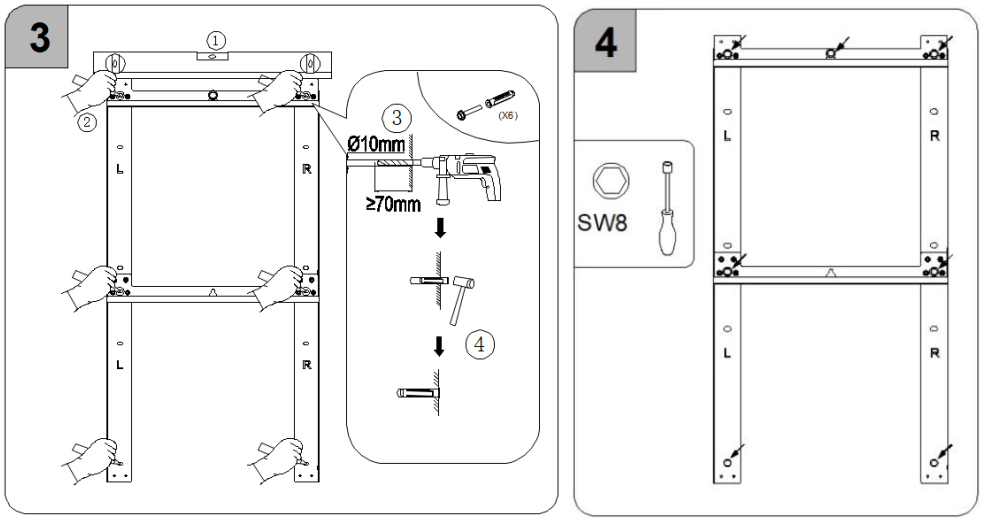

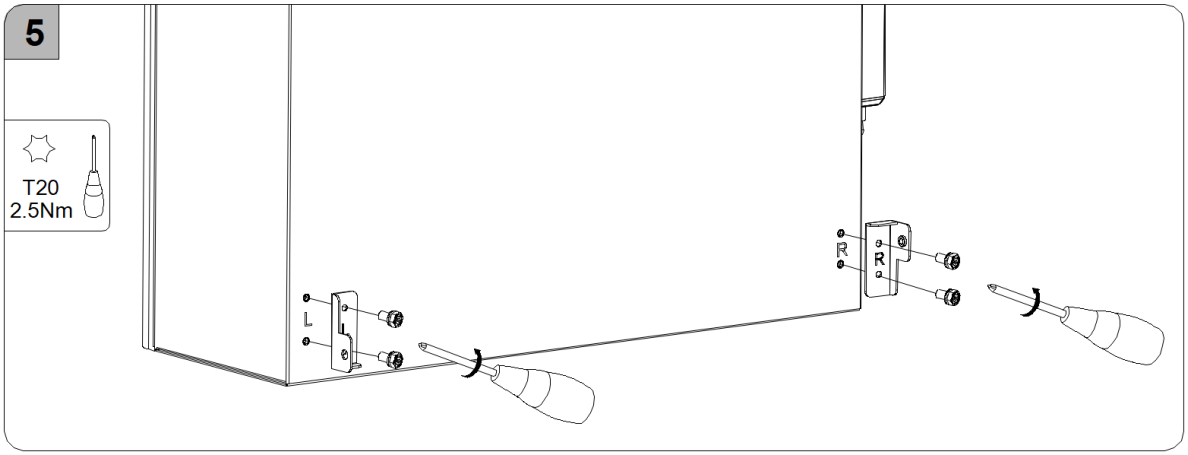
5
T20
2.5Nm
L
L
R
R

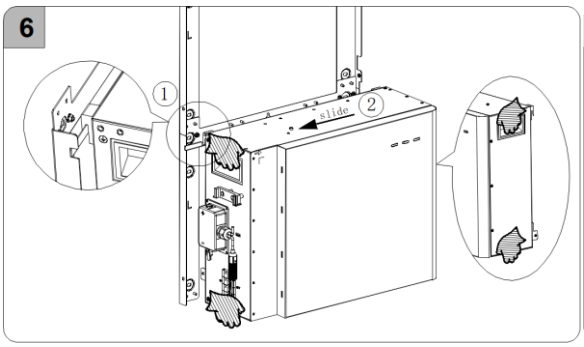
6
1
slide
2

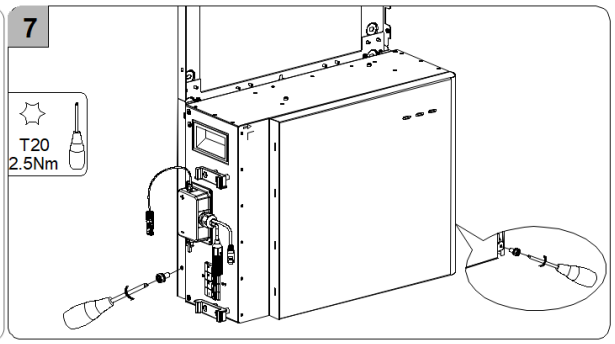
7
T20
2.5Nm

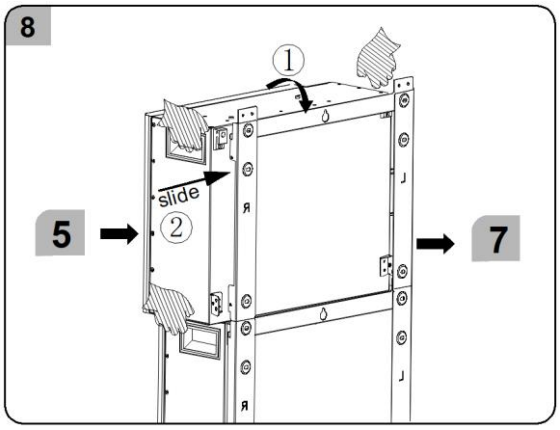
8
1
slide
2
5
7

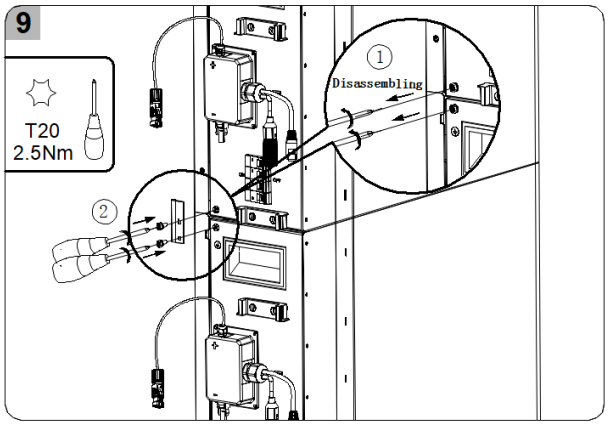
9
T20
2.5Nm
1
Disassembling
2

Wall Bracket Installation for Batteries Expansion Installation

For additional batteries installation (from bottom to top), the expansion batteries should be mounted below existing batteries, please follow the below steps.

a. Take out the top, left and right beams of the wall bracket from the package, and assemble them with M5 nuts (tool: Socket wrench SW8, torque: 2.5Nm).

Align the upper holes of the lower wall bracket to the lower rivets of the upper wall bracket, and mark the drilling position of the newly assembled wall bracket.

b. Remove the newly assembled wall bracket and drill the marked hole with drill Φ10. Insert screw anchors into the drilling holes, tighten the screws to secure the wall bracket to the wall (tool: Socket wrench SW8, torque: 6Nm).

c. For other mounting steps, please see Chapter 5.5.2.1 Wall Bracket Installation for One Battery Installation and follow step b to step g.

d. Take out the grounding bar from the package and use it to connect the lower left corner of the upper battery and the upper left corner of the lower battery (tool: T20 screwdriver, torque: 2.5Nm). When doing so, unscrew the two screws before connecting the grounding bar.

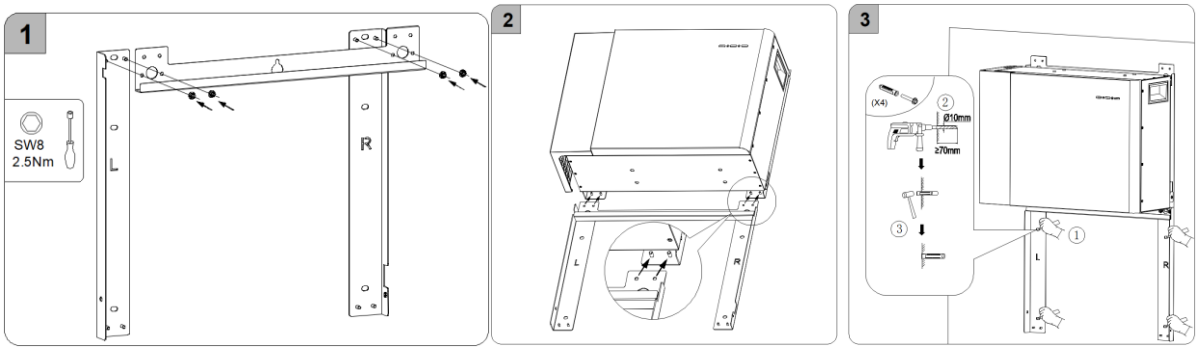

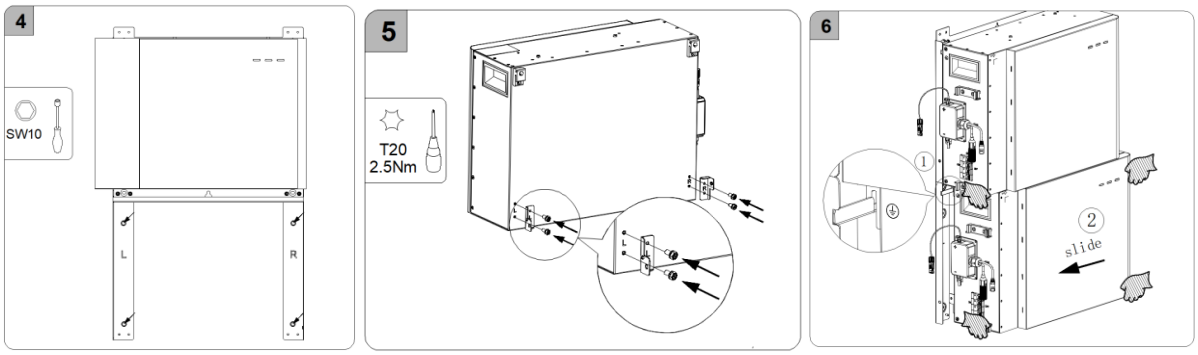

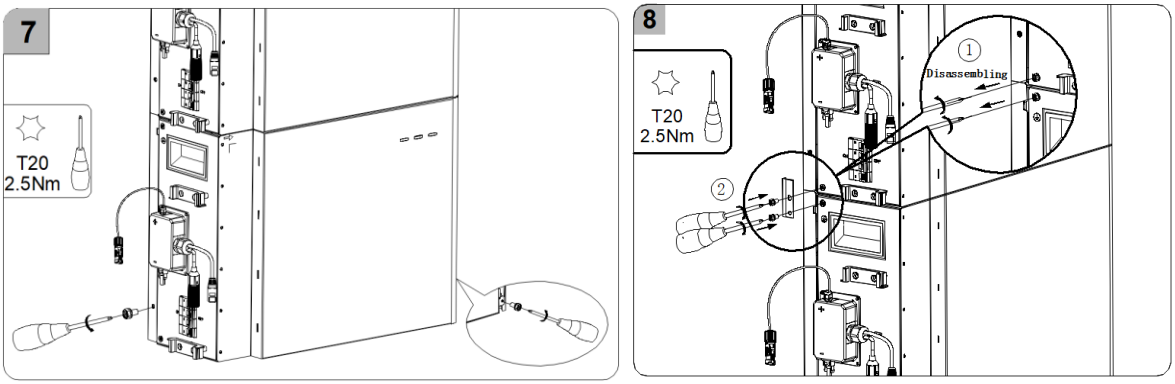

Base Installation for Several Series Batteries Installation

When mounting multiple series batteries SMILE-G3-BAT-3.8S with base installation for the first time, please follow the below steps.

a. Take out the battery base and tighten two hexagon head limit screws M5*12 to the designated location of the battery base's top (tool: T20 screwdriver, torque: 2.5Nm).

Take out the right connection block for battery base from the package and tighten it to the right side of the battery base back.

Take out the position plate and place it against the wall. Place the battery base against the position plate and adjust the feet to level the battery base.

b. Take out the left holder and right holder for wall bracket from the package and tighten them to the lower left and lower right of the battery back (tool: T20 screwdriver, torque: 2.5Nm).

c. Unscrew the screw at the lower left of the bottom battery.

d. Lift the battery by using the handles at two sides, align the bottom holes of the first battery to the screw heads on the top of the battery base. Take out 2 cheese head screws M5X10 and tighten them to battery top's designated location for later position limit.

e. Secure the battery to the battery base, tighten them with one screw M5*12 from the lower left of the battery (tool: T20 screwdriver, torque: 2.5Nm).

f. Take out one right connection plate from the battery base package, use it to connect the lower right corner of the first battery and the upper right corner of the battery base (tool: T20 screwdriver, torque: 2.5Nm).

g. Take out the next battery from the package.

Take out the left holder and right holder for wall bracket from the package and tighten them to the lower left and lower right of the battery back (tool: T20 screwdriver, torque: 2.5Nm).

Take out 2 cheese head screws M5*10, and tighten them to battery top's designated location for later position limit.

Lift the second battery by using the handles at two sides, align the bottom holes of the second battery to the screw heads on the top of the lower battery.

Continue mounting more batteries by repeating this step.

h. Take out the grounding bars from the battery package, and use it to connect the lower left corner of the upper battery and the upper left corner of the lower battery (tool: T20 screwdriver, torque: 2.5Nm). When doing so, unscrew the two screws before connecting the grounding bar.

i. Take out the right connection plates from the battery base package, use them to connect the lower right corner of the upper battery and the upper right corner of the lower battery (tool: T20 screwdriver, torque: 2.5Nm).

j. Pre-mount the top wall bracket to the upper battery top and mark drilling positions.

k. Remove the top wall bracket and cover the top of the battery with a plastic bag. Then, drill 3 holes in the wall with a Φ10 drill to a depth of about 70mm and clean the holes and insert screw anchors into the drill holes.

l. After removing the plastic bag, tighten the top wall bracket to the top of the battery (tool: T20 screwdriver, torque: 2.5Nm).

m. Secure the top wall bracket to the wall with the provided screws (tool: Socket wrench SW8, torque: 6Nm).

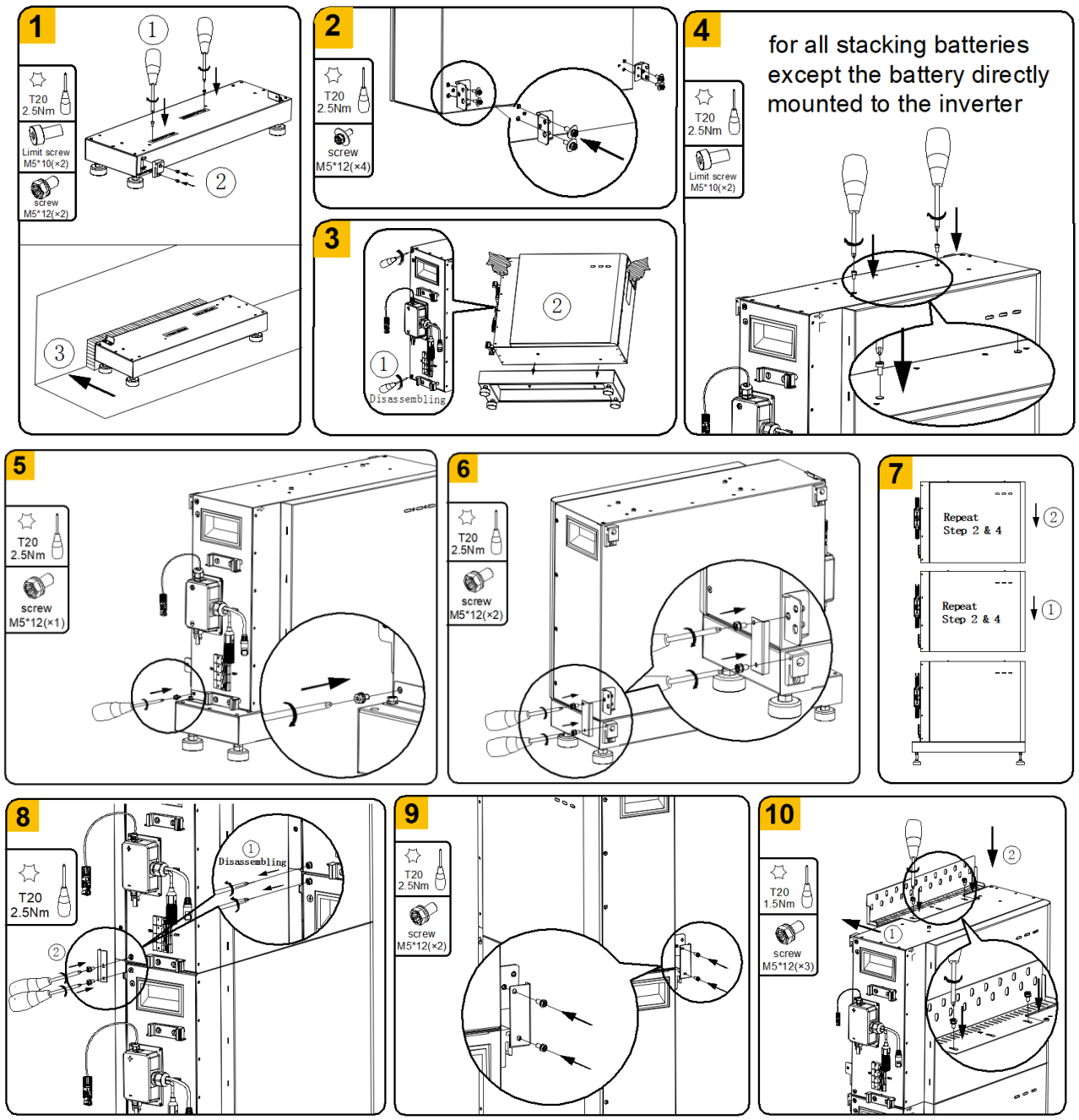

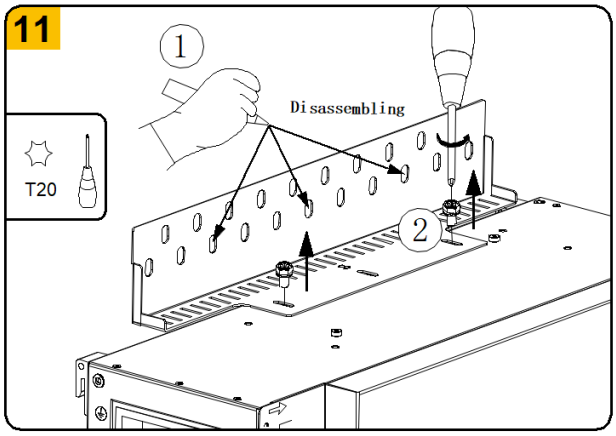
11
T20
Disassembling
1
2

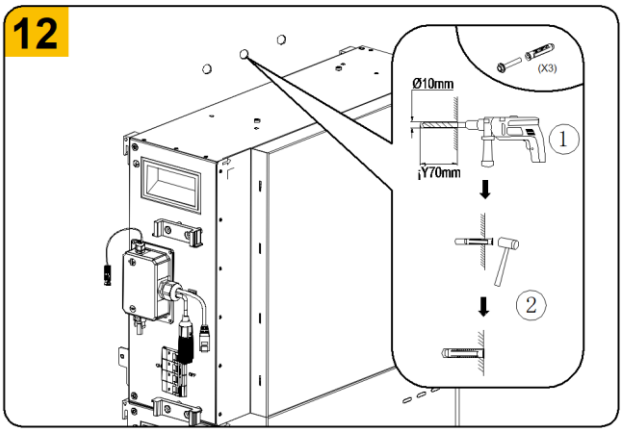
12
Ø10mm
(X3)
70mm
1
2

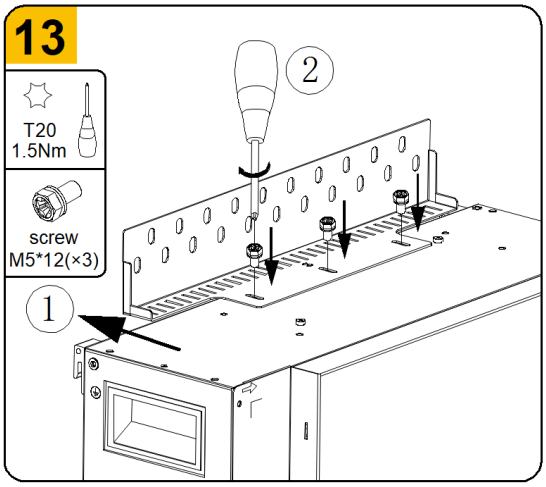
13
T20
1.5Nm
screw
M5*12(×3)
1
2

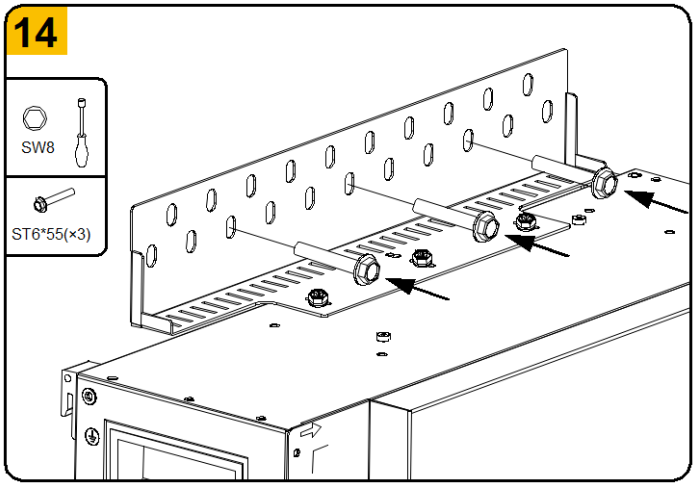
14
SW8
ST6*55(×3)

For batteries base installation, there was a tiny difference in **stacking positioning materials** between these series batteries.

For SMILE-G3-BAT-3.6S/4.0S, installers need to mount two **limit blocks** to the top of the batteries for stacking positioning of upper series battery.

For SMILE-G3-BAT-3.8S, installers need to mount two **hexagon head limit screws M5*10** to the top of the batteries for stacking positioning of upper series battery.

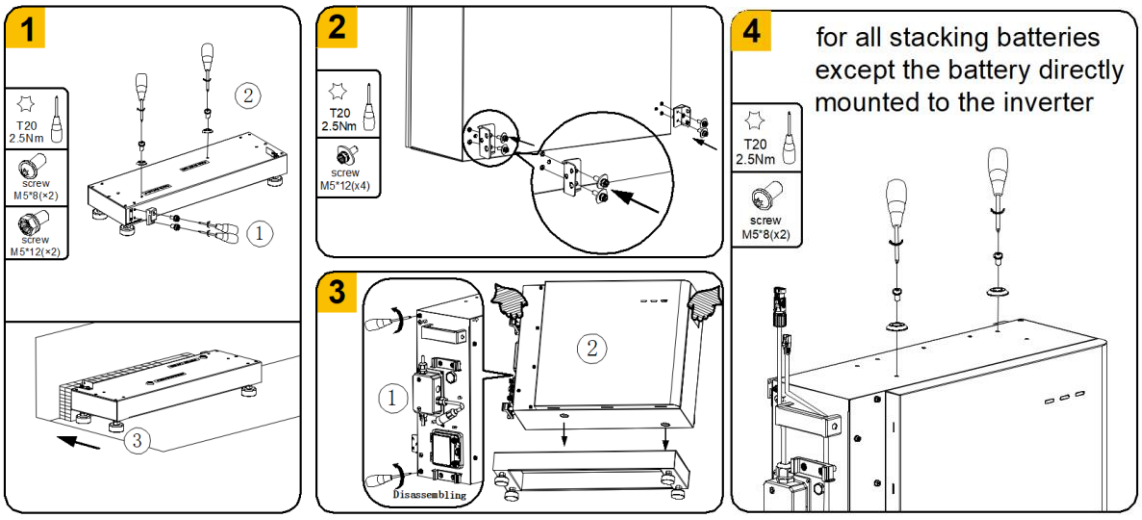

5.5.3. Mounting the Energy Storage Inverter

Mount the energy storage inverter standing on the battery

a. Take out the left support foot and right support foot from the inverter package.

b. Mount the left support foot and right support foot onto the top of the upper battery.

c. Place the inverter onto the two support feet.

Ensure the lower right and left holes on the bottom of the inverter align to and insert into the respective guides in the support feet.

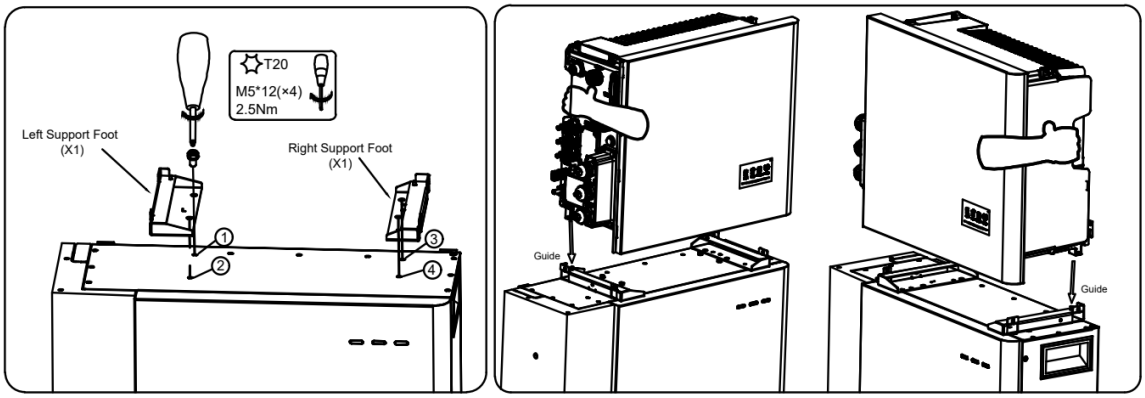

d. Attach the inverter to the side support feet. The inverter mounting holes should align to the horizontal holes of the side support feet. Note that the inverter sits inside (between) the two feet and is secured with two screws on the left and right sides.

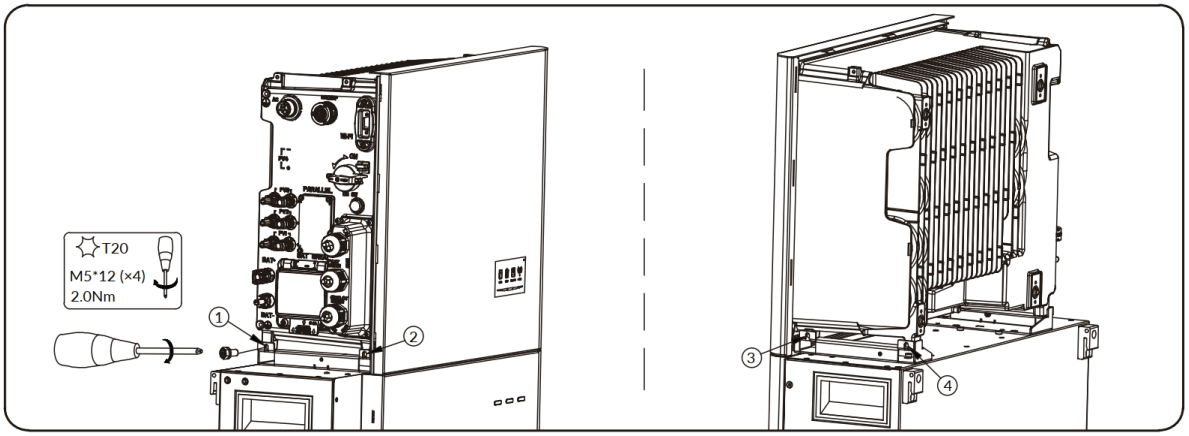

Mount the inverter with wall bracket for battery ready scenario.

a. Take out the wall bracket of the energy storage inverter from the package.

b. Select a suitable height to mount batteries below later.
Please reserve enough height if you want to add more batteries later.
Mark the four drilling positions of the wall bracket, and drill the marked hole with drill Φ10.
Insert screw anchors into the drilling holes.

c. Ensure that the wall bracket is placed horizontally using a spirit level before securing it.
Secure the wall bracket to the wall using the provided screws (tool: Socket wrench SW8, torque: 6Nm).

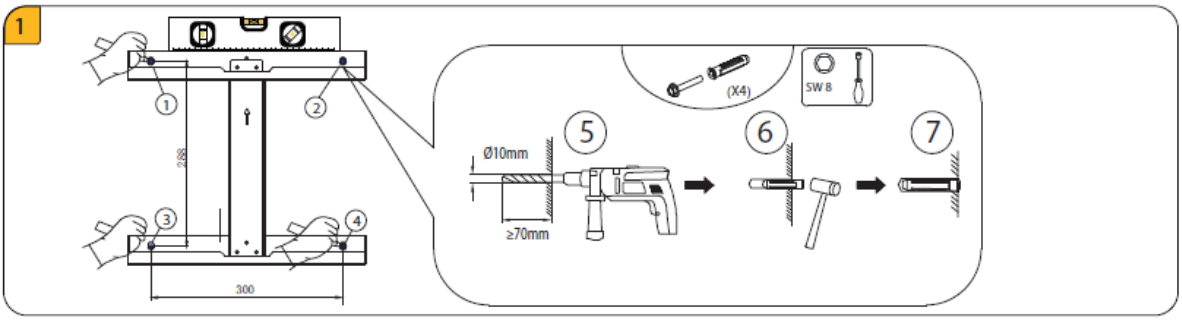

d. Take out the left support foot and right support foot, mount them to the lower right and left edges on the bottom of the inverter with screws M5*12 (tool: T20 screwdriver, torque: 2.0Nm).

e. Take out the four hooks for wall bracket from the package, assemble them with screws M5*12 (tool: T20 screwdriver, torque: 2.5Nm).

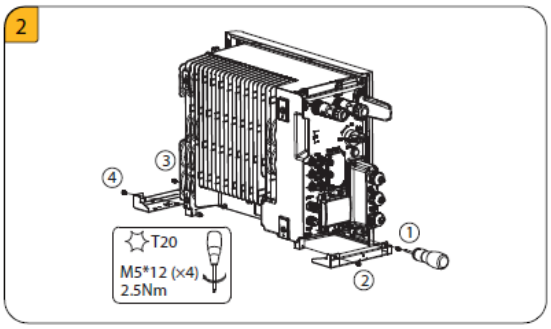

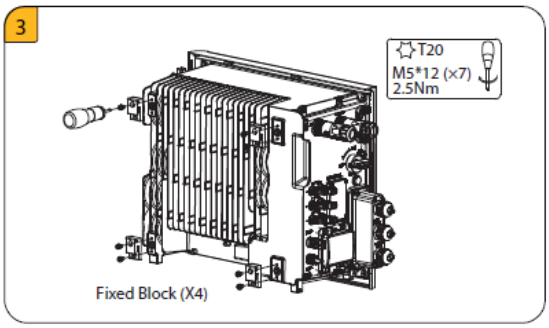

f. Hook the inverter onto the wall bracket.

g. Secure the inverter to the wall bracket. Insert the hexagon head screws M5*12 into the lower and upper threaded holes on both sides of the inverter hanging hooks respectively and tighten them. Ensure that the inverter is securely in place.

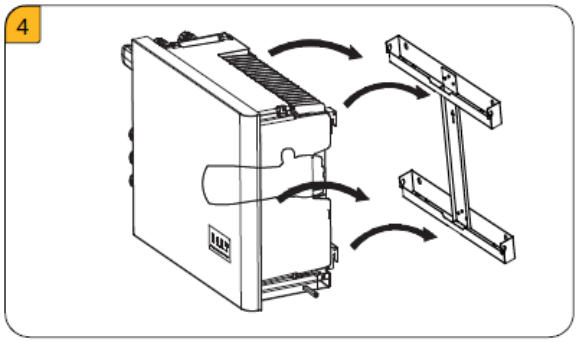

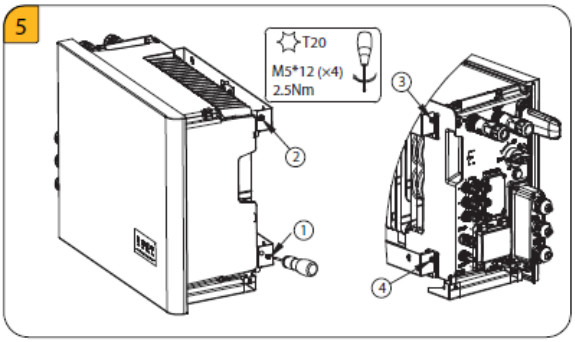

5.5.4. Special Feature Only for Battery SMILE-G3-BAT-3.6S/4.0S

Wall-Mounted Battery Disassembling

> **CAUTION**
>
> **Risk of injury due to the weight of the battery**
> Injuries may be caused if the product is lifted improperly or dropped while being transported or mounted. To avoid this danger:
> • Transport and lift the product carefully. Take the weight (45kg) of the product into account and use lifting and conveyance aids such as lifting trolleys.
> •Ensure that at least two individuals are present for mounting and disassembling the product.
> • Wear suitable personal protective equipment for all work on the product.

Before disassembling the batteries, please turn off the battery switch, unplug the cables and disassemble the cable cover.
When disassembling a battery that has been mounted with wall bracket and is not directly connected to the inverter, always hold the handles on both sides of the battery firmly and slide it to the right. Once the arrow on the upper left of the cover aligns to the left protruding side of the upper battery, carefully lift the battery forward and off the wall bracket.

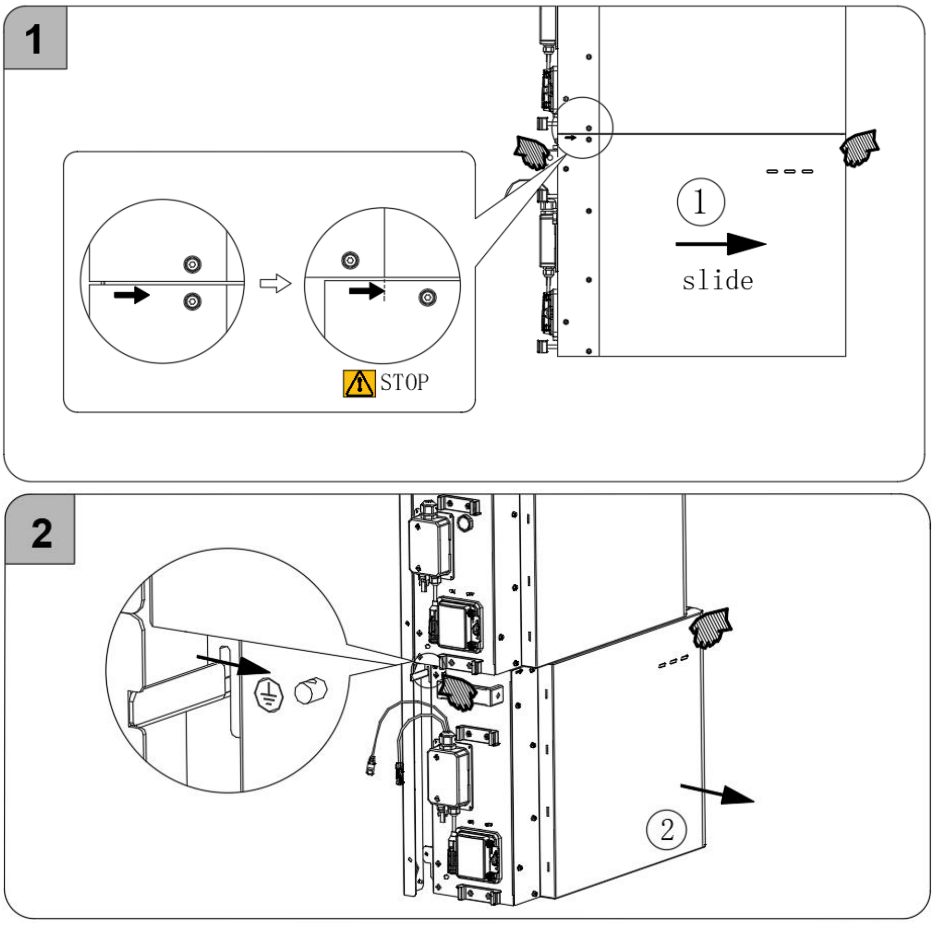

Battery Installation for Battery-Ready Application

Battery Ready scenario is that end users initially only installed hybrid inverter as PV inverter but did not install batteries, later the users decide to install the batteries. At this section we will introduce how to mount the first series battery, please follow these steps.

a. Take out the top, left and right beams of the wall bracket from battery package, assemble them with M5 nut (tool: Socket wrench SW8, torque: 2.5Nm).

b. Take out two connectors for wall brackets from inverter wall bracket package, assemble them with M5 nuts (tool: Socket wrench SW8, torque: 2.5Nm).

c. Align the upper holes of the two connectors for battery wall bracket to the lower rivets of the wall bracket of the hybrid inverter, mark the drilling position of the newly wall bracket of the series battery.

d. Remove the newly assembled battery wall bracket, drill the marked hole with drill Φ10. Insert screw anchors into the drilling holes, tighten the screws with the SW8 socket wrench to secure the wall bracket to the wall.

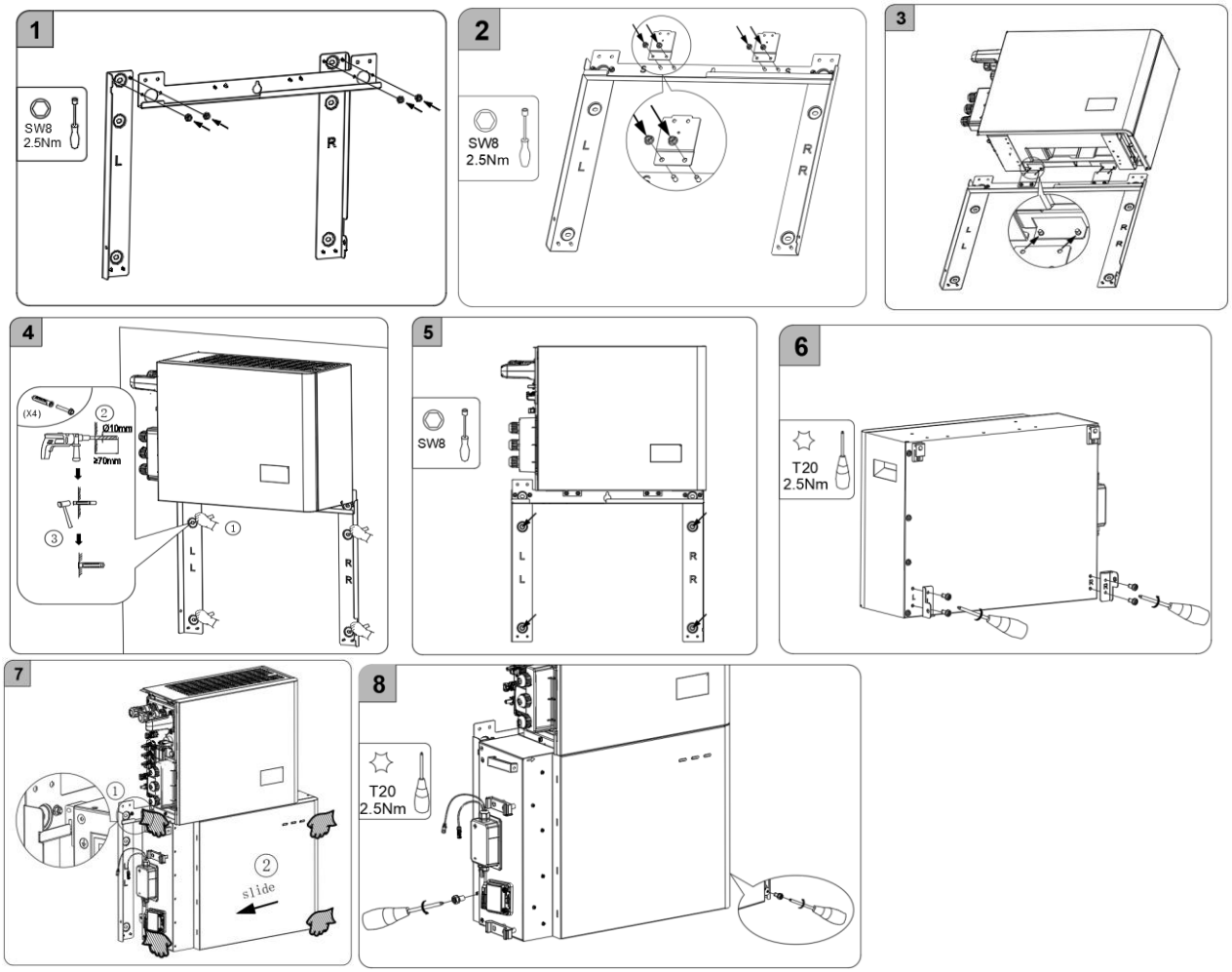

5.5.5. Mounting the Wi-Fi Module

a. Remove the protective cover of Wi-Fi port at the left of the inverter.

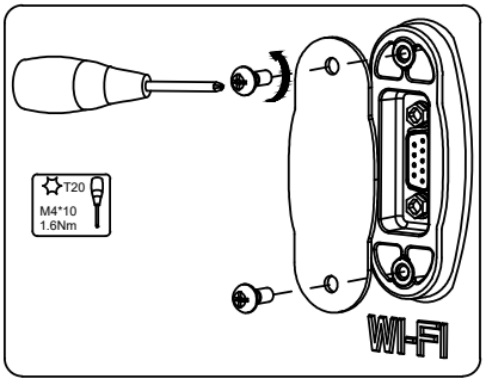

b. Tighten the Wi-Fi module onto the inverter with two M4*12 screws provided (Tool: T20 screwdriver, torque: 1.6Nm). DO NOT OVERTIGHTEN – do not damage the plastic housing of the Wi-Fi module. Note that AlphaESS always recommends a LAN cable connection over the use of a Wi-Fi module.

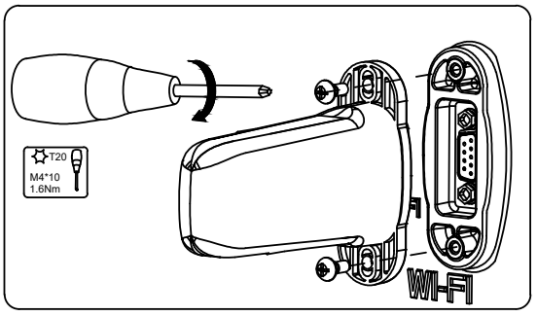

6. Electrical Connection

Precautions

DANGER

Electric Shock Hazard - Before connecting cables, switch off all circuit breakers and switches connected to the inverter and batteries.

CAUTION

• Damage to the energy storage system caused by incorrect cable connections is not covered under warranty.
• Only certified electricians accredited by AlphaESS are allowed to connect cables.
• Appropriate PPE must be worn when installing or connecting the product.

NOTICE

The cable colors shown in the electrical connection diagrams provided in this chapter are for reference only.
Select cables in accordance with local cable specifications (green-and-yellow cables are only used for PE).

6.1. Cable Requirements for Connection

No.	Cable	Type	Conductor Cross Section Area Range	Outer Diameter	Source
1	PV Power cable	Standard PV cable (recommended type: H1Z2Z2-K)	4~6mm^2	5.5~ 9mm	Purchased by the installer
2*	Signal cable	Standard network cable (recommended type: Cat5e, SFTP, UV-resistant for outdoor use)	0.12~0.2mm^2 (AWG26~AWG24)	4~6mm	Purchased by the installer
3**	Signal cable	Two-core outdoor shielded twisted pair copper cable	0.5~1.5mm^2	4~6mm	Purchased by the installer
4***	Signal cable	Outdoor shielded twisted pair copper cable	0.5~1.3mm^2	4~6mm	Purchased by the installer
5	AC power cable	Five-core (L1, L3, L3, N and PE) outdoor copper cable	4~6mm^2	13 ~17.5mm	Purchased by the installer
6	PE cable	Single-core outdoor copper cable	2.5~6mm^2	N/A	Purchased by the installer

* For RS485, LAN, three-phase meter (with CT), DRM&RRCR communication connection with inverter.

** For three-phase meter (without CT) communication connection with inverter.

*** For AUX communication connection with inverter.

6.2. Grounding Connection

> **CAUTION**
>
> **Electric Shock Hazard**
>
> Before doing electrical connection, please ensure the PV switch & all AC and BAT circuit breakers in the energy storage system are switched OFF and cannot be accidentally or unintentionally reactivated.

A grounding point is provided near the grid connector of the energy storage inverter.Take out M5 Y terminals, strip the grounding cable insulation, insert the stripped conductor into the ring terminal lug and crimp with a crimping tool.Connect the grounding terminal to the inverter (tool: T20 screwdriver, torque: 2.5Nm).

Grounding connection for the energy storage inverter.

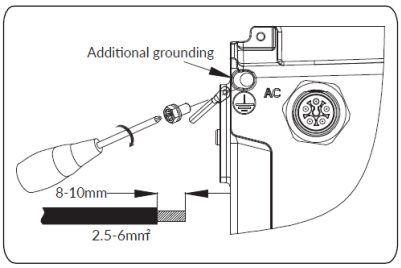

Grounding connection between the energy storage inverter and series battery.

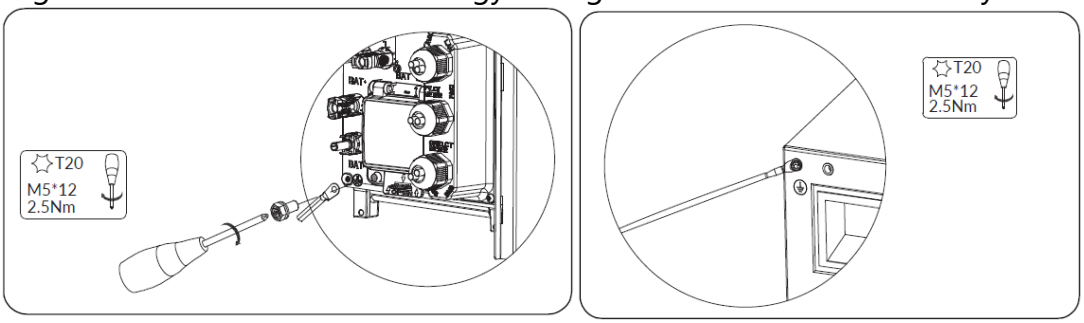

Inverter side Series Battery side

Grounding connection between the energy storage inverter and parallel battery.

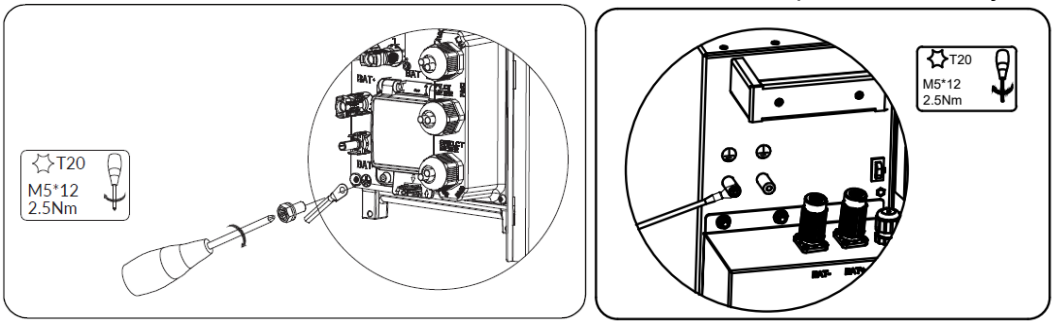

Inverter side Parallel battery side

6.3. AC Connection

6.3.1. Requirements for the AC Connection

AC cable requirements as follows:
☐ Conductor type: copper conductor (tinned copper preferred).
☐ Grid cable current carrying capacity depends on the inverter model selected and max. full current from grid, example for 10kW inverter model, max. current: 21.7A.
☐ Backup cable current carrying capacity depends on the inverter model selected and loads connected when the mains grid is available, example for 10kW inverter model, max. current: 21.7A.
Note: Account for temperature derating and voltage drop/rise when selecting wire diameters. 110°C or higher rated cable derates slower as temperatures increase.
☐ External diameter: usually 13 mm to 17.5 mm for grid connector and backup connector Grid and backup conductor cross-section recommendation: 4-6 mm^2.
☐ Insulation stripping length: 10 mm.
☐ Sheath stripping length: 43 mm.

DANGER

You must protect each inverter with an individual grid/backup circuit breaker in order to ensure that the inverter can be disconnected safely.

CAUTION

Residual-current monitoring unit

The inverter does not require an external residual-current device when operating.

If local regulations or a particular installation configuration requires the use of a residual-current device, or a Hybrid-coupled storage system with a big coupling capacity from the PV array and PV inverter, the following must be observed:

The inverter is compatible with type A residual-current devices with a rated residual current of 100mA or higher. Each inverter in the system must be connected to the utility grid via a separate residual-current device.

CAUTION

For Australia and New Zealand installation sites, the neutral cables of grid side and backup side must be connected together, otherwise the backup output function will not work normally.

6.3.2. Selecting Suitable AC Circuit Breaker

The general requirements for the selection of circuit breakers are determined by standards and country-specific provisions. The following factors should be considered when selecting a suitable circuit breaker.
Factors influencing the current-carrying capacity of the cable: type of cable used, ambient temperature around the cable, type of cable routing, bundling of cables.
Other influencing factors: loop impedance, mutual heating of circuit breakers, ambient temperature at the circuit breaker, selectivity, type of connected device.
If these factors are ignored, it will increase the risk of the circuit breaker tripping under normal operating conditions.
Selecting Circuit Breakers for the AC supply and Backup output is dependent on the maximum current of the backup circuit and the inverter (if it is force-charged), the model of MCBs used and their derating current rating considering their maximum temperatures. Supplier Datasheets detail temperature derating for their MCBs. Ensure the MCBs used are appropriate for the current and the operating temperature. Otherwise, the risk of the circuit breaker tripping will increase under normal operating conditions.

AC connection recommendation for SMILE-G3-T4-INV

Description	Max. Current	Breaker Type	Recommended Cable Cross Section
Grid Side	11.6 A	16 A	2.5 to 6 mm^2
Backup Side	8.7 A	16 A	2.5 to 6 mm^2

AC connection recommendation for SMILE-G3-T5-INV

Description	Max. Current	Breaker Type	Recommended Cable Cross Section
Grid Side	14.5 A	25 A	4 to 6 mm^2
Backup Side	10.9 A	16 A	2.5 to 6 mm^2

AC connection recommendation for SMILE-G3-T6-INV

Description	Max. Current	Breaker Type	Recommended Cable Cross Section
Grid Side	17.4 A	25 A	4 to 6 mm^2
Backup Side	13 A	20 A	4 to 6 mm^2

AC connection recommendation for SMILE-G3-T8-INV

Description	Max. Current	Breaker Type	Recommended Cable Cross Section
Grid Side	17.4 A	25 A	4 to 6 mm^2
Backup Side	13 A	20 A	4 to 6 mm^2

AC connection recommendation for SMILE-G3-T10-INV

Description	Max. Current	Breaker Type	Recommended Cable Cross Section
Grid Side	21.7 A	32 A	4 to 6 mm^2
Backup Side	21.7 A	32 A	4 to 6 mm^2

6.3.3. Grid and Backup Connection

The steps for connecting the grid connector are as follows:

1. Disconnect the PV switch, grid, backup and battery circuit breaker and secure them to prevent reconnection.2. Strip the AC cable outer insulation by 43 mm.3. Shorten L1, L2, L3 and N by 3 mm each, so that the grounding conductor is 3 mm longer. This ensures that the grounding conductor is the last to be pulled from the screw terminal in the event of tensile strain.4. Strip the insulation of L1, L2, L3, N and the grounding conductor 10 mm.5. If using fine stranded wire, fit L1, L2, L3, N and PE with bootlace ferrules.

6. Disassemble the grid connector plug, pass the swivel nut and threaded sleeve over the AC cable.

7. Insert the five conductors into the screw terminals on the bush insert and tighten the screws using the torque 1.2 Nm with provided tool. Ensure that all conductors are securely fastened in the screw terminals on the bush insert.

8. Insert the threaded sleeve into the bush insert and hear the "click" sound. Screw the swivel nut onto the threaded sleeve.

9. Insert the grid plug connector into the grid connection socket for the grid connection until it audibly snaps into place. When doing so, align the grid plug connector so that the convex rib on the bush insert of the grid plug connector should point to the groove on the grid connection socket first, and then insert the grid plug connector to the grid connection socket.

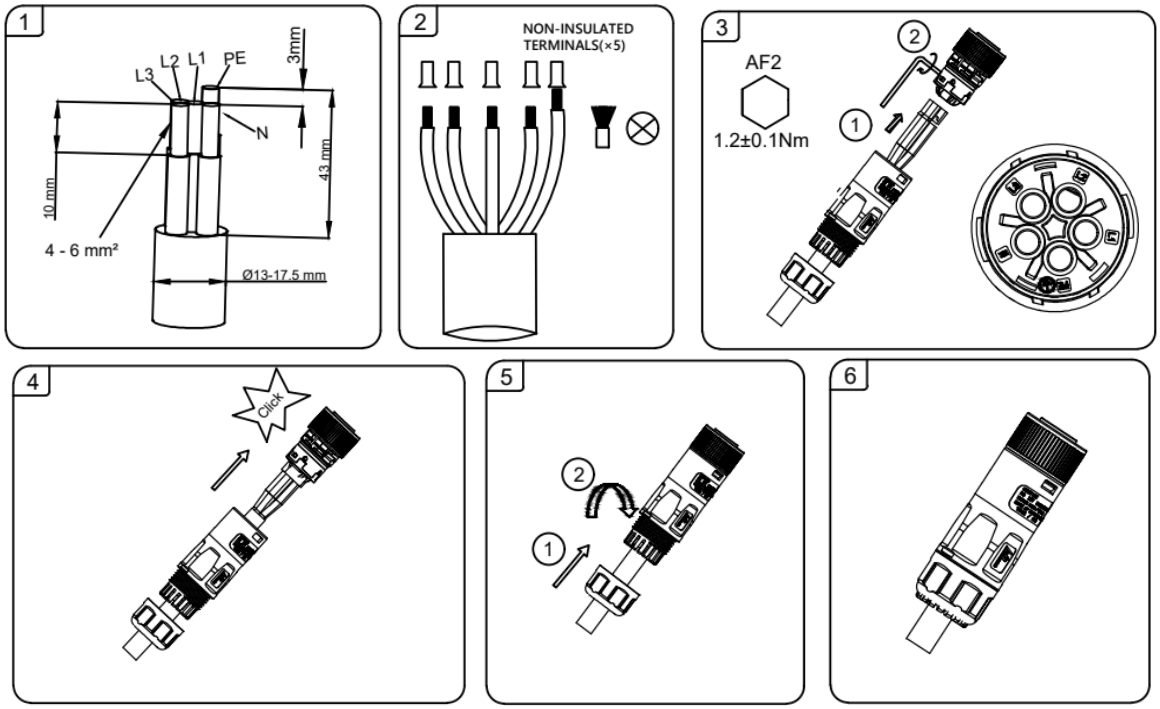

The steps for backup connection are similar to the grid connection, with a distinction in step 9:

Insert the backup plug connector into the backup connection socket for the backup connection until it audibly snaps into place. When doing so, align the backup plug connector so that the groove on the bush insert of the backup plug connector should point to the convex rib on the backup connection socket first, and then insert the backup plug connector to the backup connection socket.

6.3.4. Disassembling Grid and Backup Connectors

Disassemble the grid plug connector (e.g. due to faulty assembly), proceed as follows.
1. Unplug the grid plug connector. Detailed steps: use a flat-blade screwdriver (blade width: 2.5 mm) to push the orange latch forwards to unlock the connector coupling structure, rotate the bush insert of the grid plug connector anticlockwise, then pull the grid plug connector apart from the grid connection socket. Do not pull on the cable.
2. Unlock the grid plug connector. To do this, unscrew the swivel nut from the threaded sleeve, then insert a flat-blade screwdriver (blade width: 2.5 mm) into the side catch mechanism and pry the catch mechanism open. Carefully pull the bush insert apart.

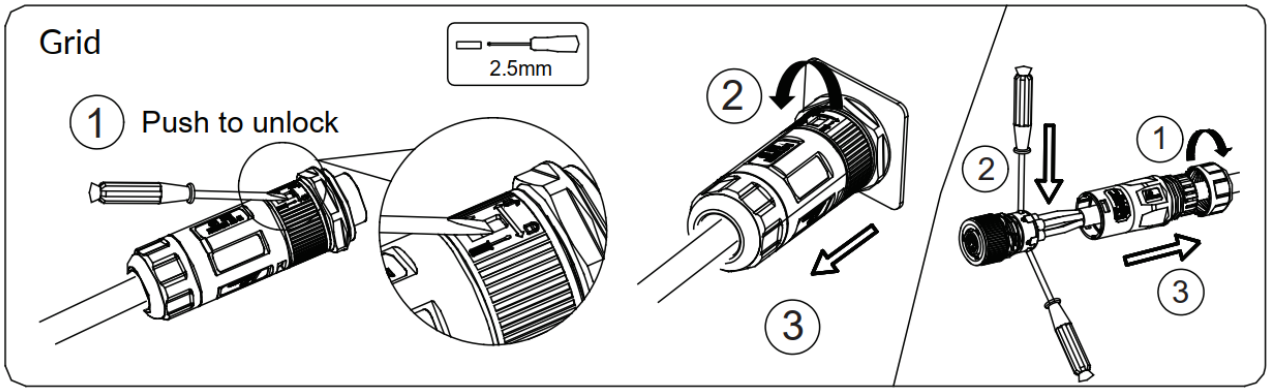

Disassemble the backup plug connector (e.g. due to faulty assembly), proceed as follows.
1. Unplug the backup plug connector. Detailed steps: use a flat-blade screwdriver (blade width: 2.5 mm) to push the orange latch forwards to unlock the connector coupling structure, rotate the bush insert of the backup plug connector clockwise, then pull the backup plug connector apart from the backup connection socket. Do not pull on the cable.
2. Unlock the backup plug connector. To do this, unscrew the swivel nut from the threaded sleeve, then insert a flat-blade screwdriver (blade width: 2.5 mm) into the side catch mechanism and pry the catch mechanism open. Carefully pull the bush insert apart.

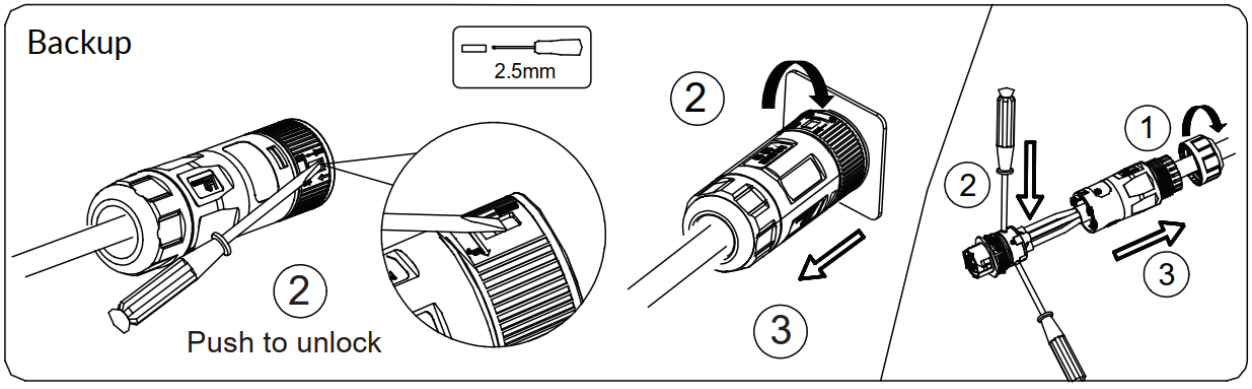

6.3.5. Meter Connection

Item	Current	Scenarios
DTSU666-3*230V 5(80)A	80A	Three-phase meter (without CT)
DTSU666-3*230V 100A/40mA	100A	Three-phase meter (with CT)
DTSU666-3*230V 250A/50mA	250A	Three-phase meter (with CT)

Loosen the strain relief nuts of the cable glands on the COM connection cover of inverter, and unscrew the 4 screws on the corners, then you will see meter communication ports. Any of the meter communication ports can be used.

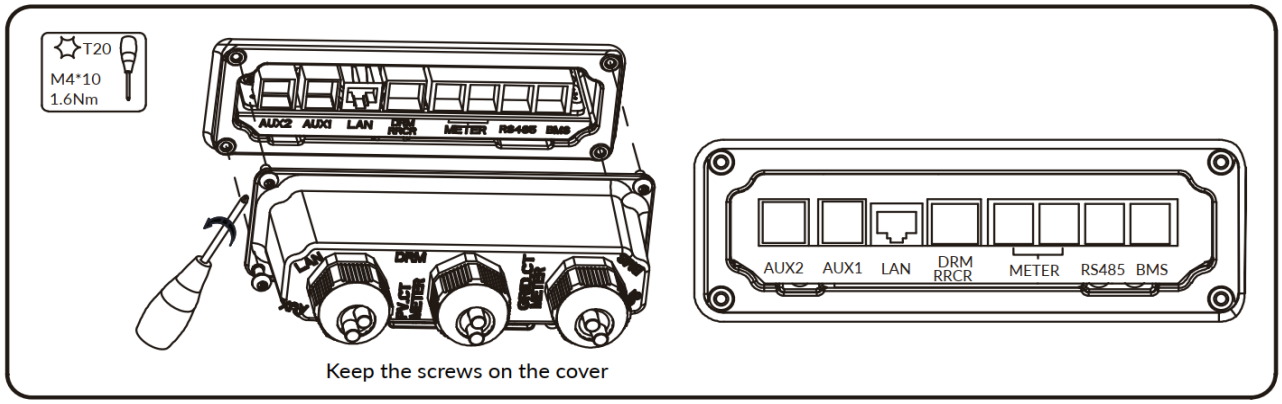

6.3.5.1 Meter Wiring

Pass the meter communication cable through the cable gland of the COM connection cover but don't tighten the strain relief nut of the cable gland.
Insert the RJ45 plug of the meter communication cable into the METER communication port labelled "METER" of the inverter.

The other steps for meter connection as follows:
1. DTSU666-3*230V 5(80)A: Three phase meter (without CT) connection

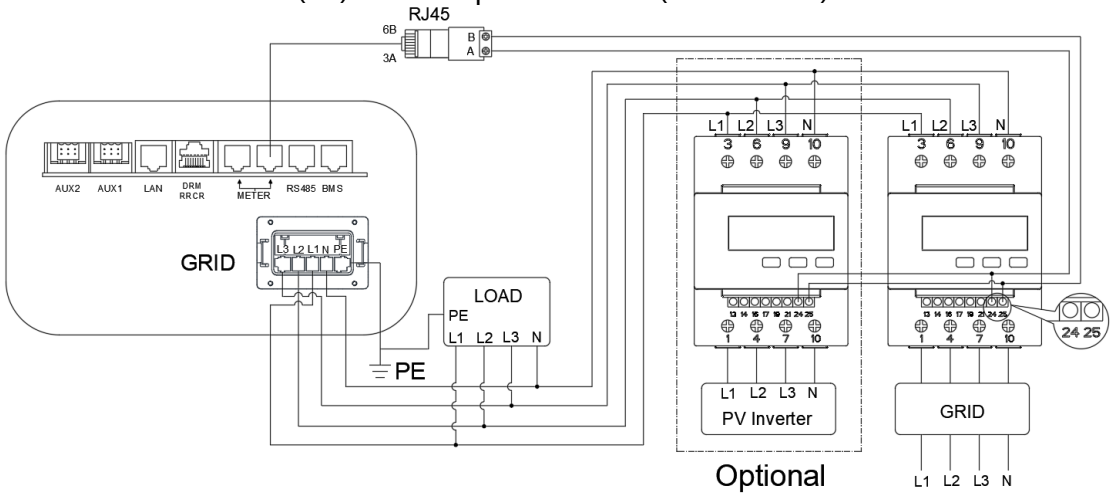

Meter communication cable requirements: two-core outdoor shielded twisted pair copper cable (flexible), conductor cross-section 0.5~1.5mm^2, wires terminal should be fitted with bootlace ferrules.

2. DTSU666-3*230V 100A/40mA, DTSU666-3*230V 250A/50mA: Three phase meter (with CT) connection

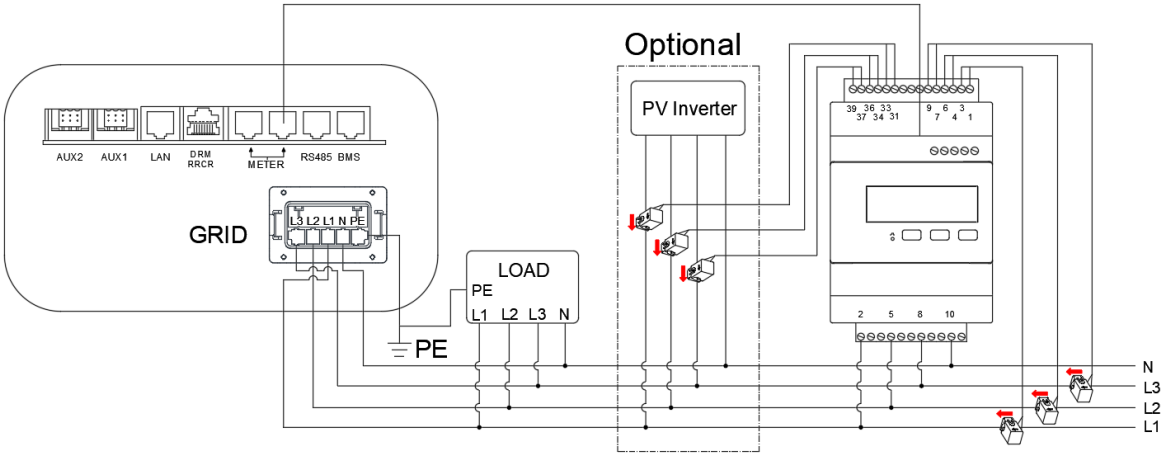

Meter communication cable requirements: standard network cable (recommended type: Cat5e, SFTP, UV-resistant for outdoor use).
The connections are marked clearly on the meter.

Wiring location description of Chint three phase meter (with CT)

Grid CT	PV CT	GRID
1--------IA* (White)	31--------IA* (White)	2----------L1
3--------IA (Blue)	33--------IA (Blue)	5----------L2
4--------IB* (White)	34--------IB* (White)	8----------L3
6--------IB (Blue)	36--------IB (Blue)	10-------- N
7--------IC* (White)	37--------IC* (White)	
9--------IC (Blue)	39--------IC (Blue)	

CT Group	Grid-> Load								PV->Load					
CT Phase	IA*	IA	IB*	IB	IC*	IC			IA*	IA	IB*	IB	IC*	IC
Terminal	1	3	4	6	7	9	X	X	31	33	34	36	37	39
Colour	White	Blue	White	Blue	White	Blue			White	Blue	White	Blue	White	Blue

NOTICE

Be VERY careful when wiring or checking these connections because the connections appear reversed when the meter is secured in place on the Din Rail. Always physically check the label on the meter when wiring any CTs or grid reference wires.

6.3.5.2 Meter Configuration

Meter Setting on the Meter's Display

If connecting Chint DTSU666 meters without CTs, two meters are required if there is any AC-coupled PV inverter, one for the Grid Import/Export and one for the AC-coupled PV inverter measurements.

Model	Grid Meter Address	PV Meter Address
DTSU666-3*230V 5(80)A (without CT)	1	2
DTSU666-3*230V 100A/40mA (with CT)	1	N/A
DTSU666-3*230V 250A/50mA (with CT)	1	N/A

1. Meter setting for type DTSU666-3*230V 5(80)A, which is three-phase meter (without CT)

When the meter is used as grid meter, the default address is 1. The installer doesn't need to make any other settings.

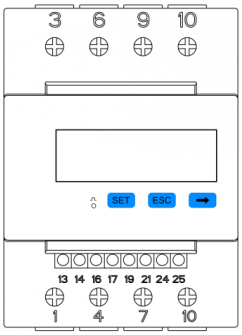

If installer wants to have a check, please follow the steps below:

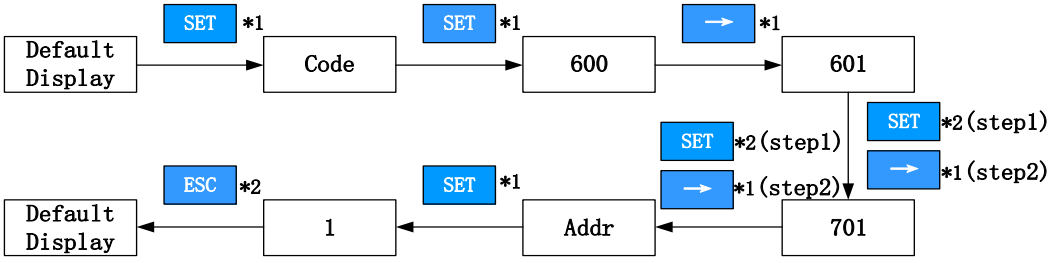

When the meter is used as PV meter, please follow the steps below to complete the address setting:

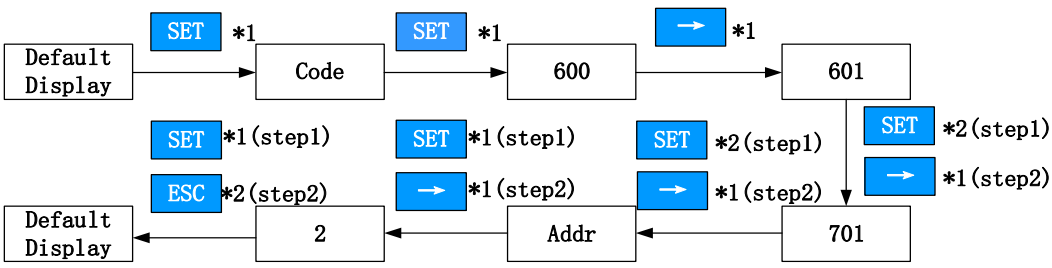

2. Meter setting for type DTSU666-3*230V 100A/40mA and DTSU666-3*230V 250A/50mA, three-phase meter (with CT)

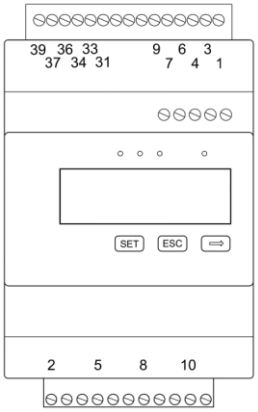

The default address is 1. The installer doesn't need to make any other settings.

If installer wants to have a check, please follow the steps below:

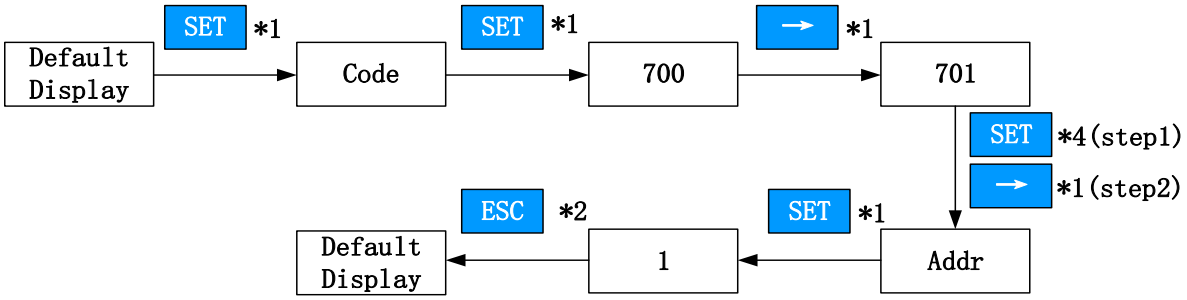

The display order of parameters:

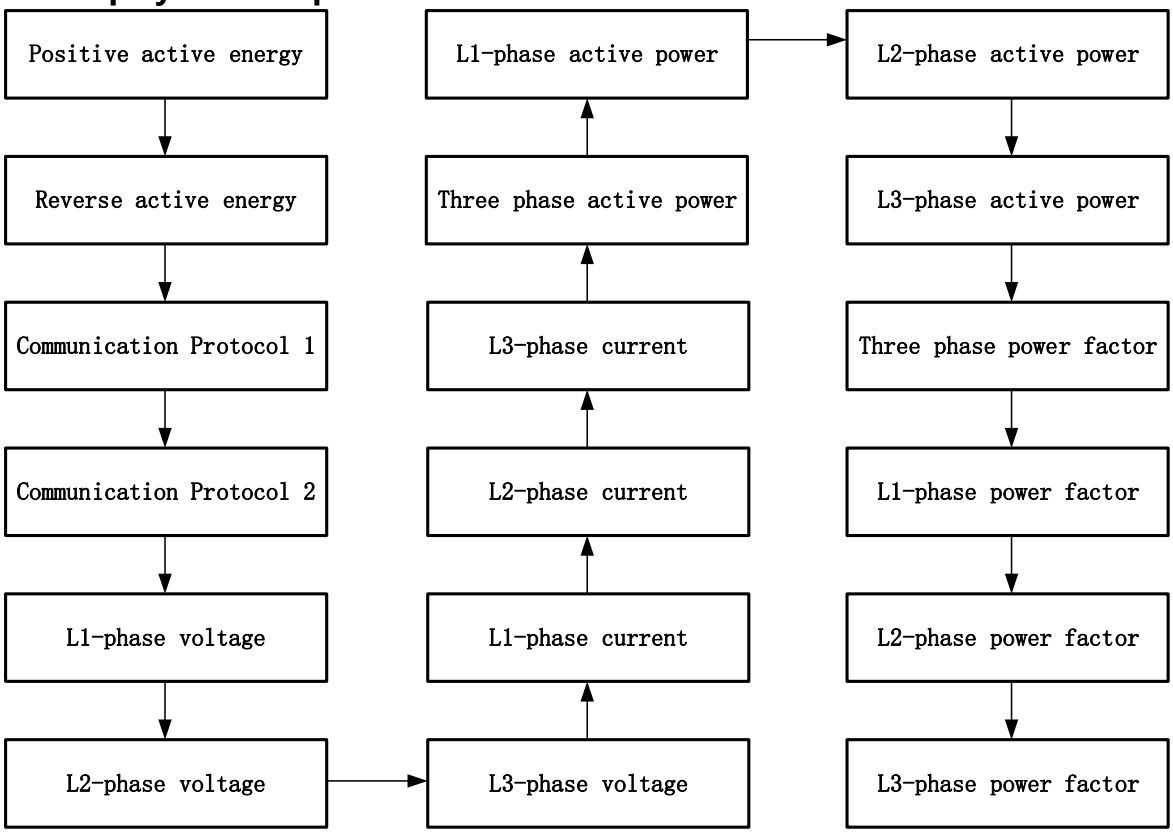

Removing the Autocorrect function of the DTSU666 Meter

DO NOT SKIP THIS STEP

The DTSU meter includes a function designed to recognise CTs placed on incorrect phases (i.e. the CT is not clamped around the same phase as its voltage reference). The feature is limited in that it only makes its automated correction ONCE. In practice, this can cause far more frustration than it solves. AlphaESS requires that installers disable this feature.

- Enter the setup screen of the DTSU meter. Password is 701.
- Scroll through to the setting for J1.
- Change the setting for J1 to Zero ("J1 – 0").
- Scroll through to the setting for J2.
- Change the setting for J2 to Zero ("J2 – 0").
- Exit back to the main screen and scroll through again to confirm that both J1 and J2 are set to zero.

6.4. PV Connection

DANGER

Danger to life due to electric shock if live components or DC cables are touched

The DC cables connected to a battery or a PV module may be live. Touching live DC cables can result in serious injury or even death due to electric shock. To avoid this danger:

- Disconnect the inverter and battery from voltage sources and make sure it cannot be reconnected before working on the device.
- Do not touch non-insulated parts or cables.
- Do not disconnect the DC connectors under load.
- Wear suitable personal protective equipment for all work on the product.
- Observe all safety information in this document.

NOTICE

Risk of the inverter due to overvoltage

The inverter can be destroyed if the open-circuit voltage of the PV modules exceeds the maximum input voltage of the inverter.

- If the open-circuit voltage of the PV modules exceeds the maximum input voltage of the inverter, do not connect any strings to the inverter and check the design of the PV system.

NOTICE

Risk of product damage due to ground fault on DC side during operation

Due to the transformerless topology of the inverter, ground faults on DC side during operation can lead to irreparable damage. Damages to the inverter due to a faulty or damaged DC installation are not covered by warranty. Although the inverter is equipped with a protective device that checks whether a ground fault is present during the starting sequence, the inverter is not protected during operation.

- Ensure that the DC installation is carried out correctly and no ground fault occurs during operation.

NOTICE

Risk of the inverter damage due to sand, dust and moisture ingress if the PV inputs are not closed

The inverter is properly sealed only when all unused PV inputs are closed with sealing plugs. Sand, dust and moisture penetration can damage the inverter and impair its functionality.

- Seal all unused PV inputs with sealing plugs.

Please ensure the follows before connecting PV strings to the inverter:

- Make sure the open voltage of the PV strings will not exceed the max. DC input voltage (1000Vdc). Violating this condition will void the warranty.
- Make sure the polarity of the PV connectors is correct.
- Make sure the PV-switch, circuit breakers of battery, AC-BACKUP and AC-Grid are all isolated/in their "off" states.
- Make sure the PV resistor to ground is higher than 200K Ohms.

The inverter uses the Vaconn D4 PV connectors. Please follow the picture below to assemble the PV connectors. PV conductor cross section requirements: 4~6 mm^2.

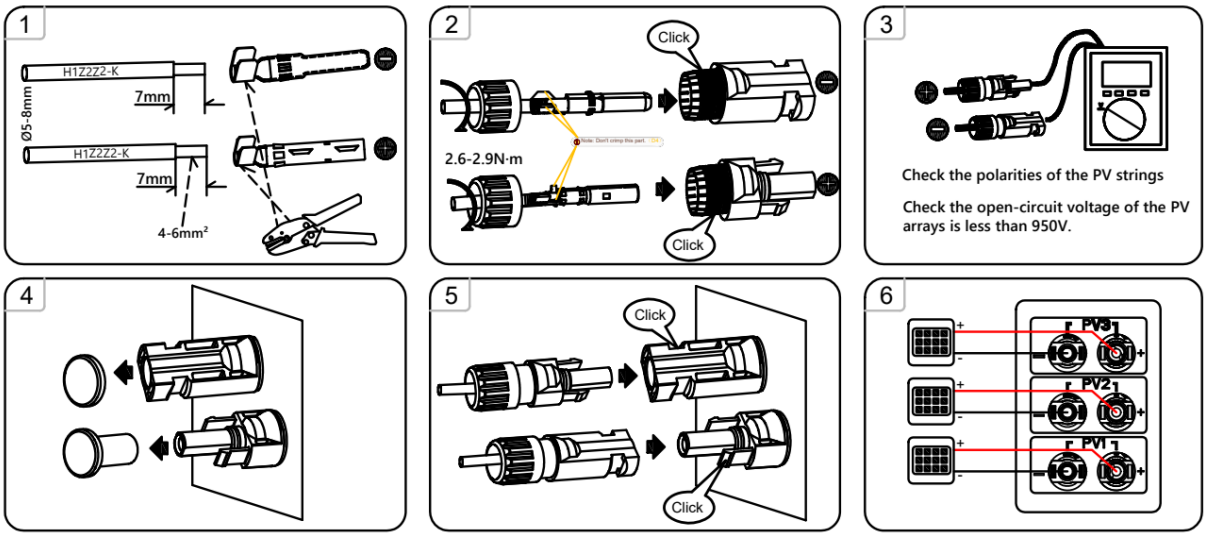

6.5. Electrical Connection between the Inverter and Battery

6.5.1. Communication Connection between INV and BAT

Communication cable connection between inverter and SMILE-G3-BAT-8.2P:

a. Take out the battery communication cable from the battery packaging.
b. Pass the battery communication cable (BMS cable) through the cable gland of the COM connection cover of energy storage inverter. Do not tighten the strain relief nuts of the cable glands yet.
c. Insert the RJ45 plug into the BMS communication port on the Inverter Communication ports labelled “BMS”.
d. Only secure the COM connection cover in place after the Meter communication cable, the BMS cable and the LAN cable (if used) have been clipped into their respective ports.
e. When securing the COM connection cover over the communication ports, tighten the cover in place and then lightly push the communication cables into the cover as you tighten the strain relief nuts onto the cables. This will ensure the communication cables are well-seated in the RJ45 ports.
f. The battery communication ports of SMILE-G3-BAT-8.2P are on the left side. Disassemble the battery communication connector components, unscrew the swivel nut, press the cable support sleeve out of the threaded sleeve.
g. Thread the swivel nut and threaded sleeve over the battery communication cable. At the same time, thread the cable through the opening in the cable support sleeve. Insert the RJ45 plug into the BMS communication port of the battery and screw the threaded sleeve. Press the cable support sleeve into the threaded sleeve. Screw the swivel nut onto the threaded sleeve.

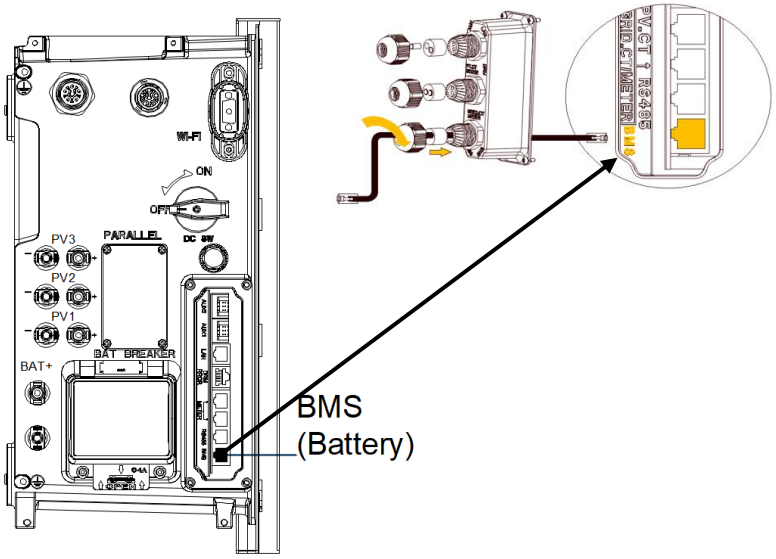

Inverter side

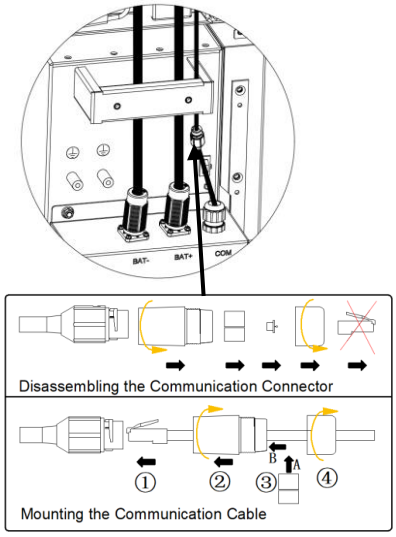

Battery SMILE-G3-BAT-8.2P side

Communication cable connection between the energy storage inverter and series batteries:

a. Pass the battery communication cable of the upper battery through the cable gland of the COM connection cover of inverter. Do not tighten the strain relief nuts of the cable gland.

b. Insert the RJ45 plug to the BMS communication port of the energy storage inverter.

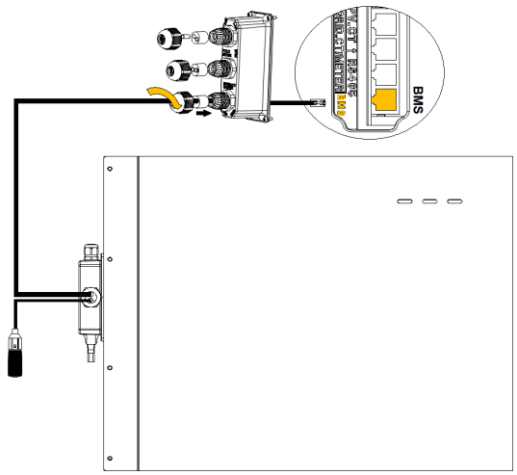

6.5.2. System Connection between INV and BAT

DANGER

Danger to life due to short-circuit of the battery

Touching the short-circuit connection of the battery can result in significant injuries or even death due to electric shock and massive energy release.

- Switch off the battery breaker which is located at the left side of the battery.
- Please connect both ends of one battery power cable completely before connecting the next power cable to avoid short-circuiting of the positive and negative battery power cables.

Power cables connection between inverter and parallel battery SMILE-G3-BAT-8.2P:

a. Take out the battery power cables from the battery packaging.

b. Remove the protective caps from the battery power connectors of the inverter.

c. Connect the battery cables to the inverter and battery SMILE-G3-BAT-8.2P.

Please pay attention to the cable type. There are five kinds of cables:

No.	Picture	Description
1	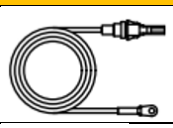	Red power cable: Connect BAT positive of parallel battery and the BAT positive of inverter
2	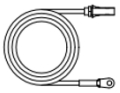	Black power cable: Connect BAT negative of parallel battery and the BAT negative of inverter
3	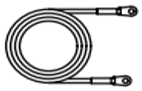	Red power cable: Connect BAT positive terminals of batteries
4	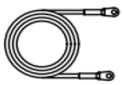	Black power cable: Connect BAT negative terminals of batteries
5		The battery communication cable: Connect the BMS communication ports of the inverter and battery. Connect the BMS communication ports of the batteries

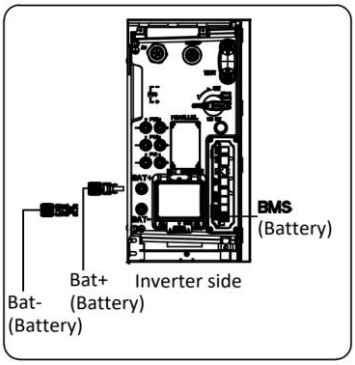

Inverter side

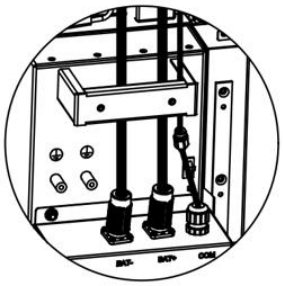

SMILE-G3-BAT-8.2P

For electrical connection between multiple parallel batteries SMILE-G3-BAT-8.2P, please follow the steps below.

a. Take out the battery power cables and communication cable from battery package.

b. Connect the power cables from battery 2 to battery 1.

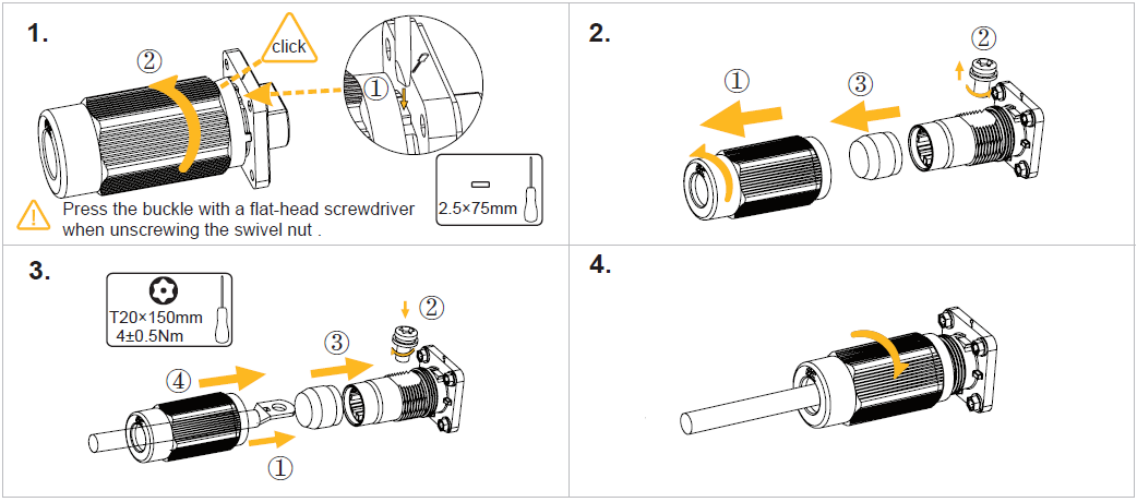

Press the buckle with a flat-head screwdriver (blade width: 2.5mm) when unscrewing the threaded sleeve of the battery power connector.
Take out the sealing ring from the terminal.
Unscrew the screw on the terminal used to connect the battery power cable.
Pass the battery power+ cable through the threaded sleeve and the sealing ring, enter the terminal.
Tighten the screw to secure the battery power cable on the terminal (tool: T20 screwdriver, torque: 4Nm).
Push the sealing ring to the terminal.
Tighten the threaded sleeve to the terminal by hand.
Repeat the above steps to finish the other end connection of battery power+ cable.
Refer to the above steps, connect the battery power- cable between two batteries SMILE-G3-BAT-8.2P.

c. Connect the BMS communication cables from battery 2 to battery 1.

The battery communication ports of SMILE-G3-BAT-8.2P are on the left side.
Disassemble the battery communication connector components, unscrew the swivel nut, press the cable support sleeve out of the threaded sleeve.
Thread the swivel nut and threaded sleeve over the battery communication cable.
At the same time, thread the cable through the opening in the cable support sleeve. Insert the RJ45 plug into the BMS communication port of the battery and screw the threaded sleeve. Press the cable support sleeve into the threaded sleeve. Screw the swivel nut onto the threaded sleeve.
Repeat the above steps to finish the other end connection of battery communication cable.

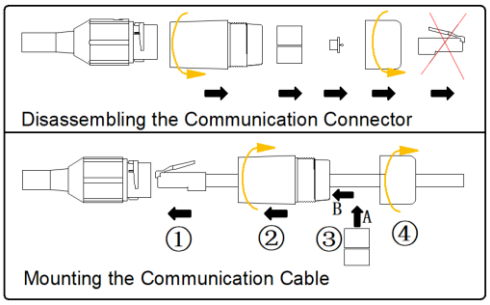

d. For grounding connection between parallel batteries, please refer to Chapter 6.2 Grounding Connection.
e. When installing more parallel batteries, repeat the steps from a to d.

NOTICE

Connect the cables between the SMILE-G3-BAT-8.2P batteries, route them from the rear side of the battery when two batteries are installed side by side.

You can install up to 6 batteries in a system. Please install extra batteries by side. Batteries can be stacked up to two batteries per column.

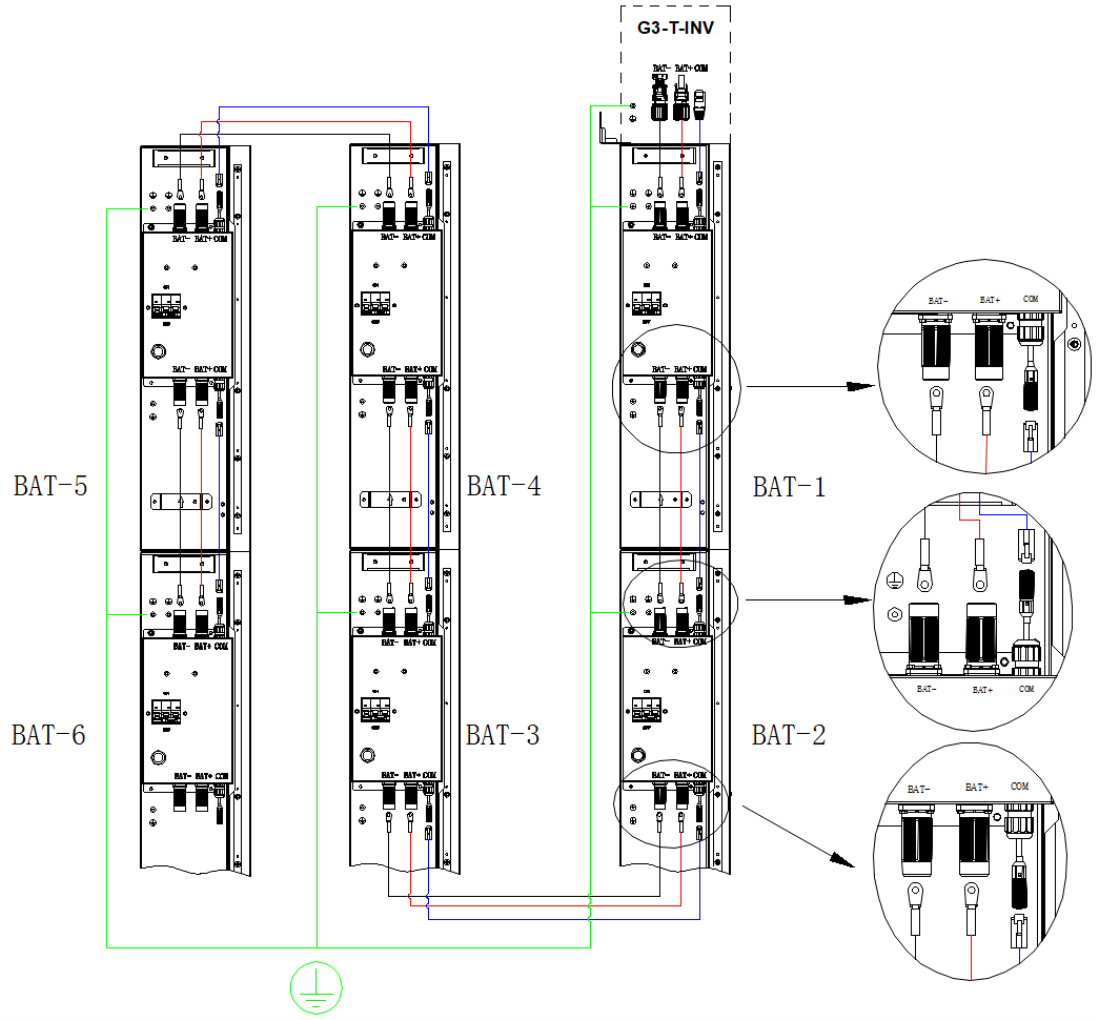

Remove the excess terminal resistor:

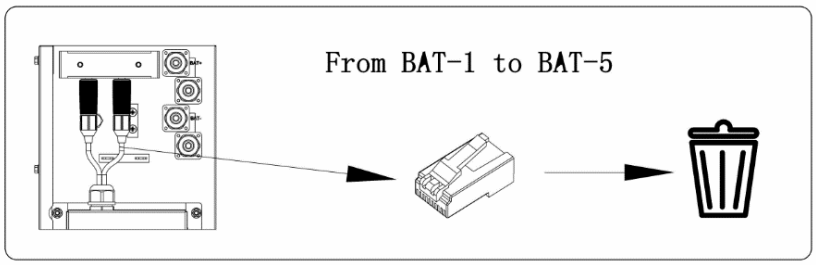

Cables connection between the Inverter and series batteries of one column.

Please pay attention to the cable type. There are 3 kinds of cables:

No.	Picture	Description
1		Grounding cable between inverter and first series battery: connect the grounding point of the upper battery of first column series batteries and the grounding point of the inverter
2	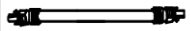	The red power cable: Connect BAT main positive of series battery and the BAT positive of inverter
3	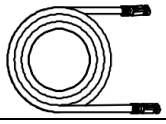	The black power cable: Connect BAT main negative of series battery and the BAT negative of inverter

DANGER

Danger to life due to burns caused by electric arcs through short-circuit currents

Short-circuit currents in the battery can cause heat build-up and electric arcs. Heat build-up and electric arcs may result in lethal injuries due to burns。

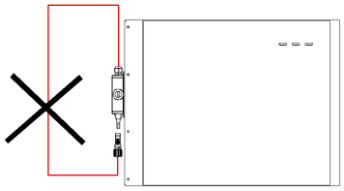

• Disconnect the battery from all voltages sources prior to performing any work on the battery.

• The upper connector of the lower battery is connected to the lower connector of the upper battery, otherwise the short-circuiting of the battery will occur.

• Observe battery safety information provided in the manual.

Detailed electrical connection between the inverter and series batteries as follows:

a. Take out all cables from the inverter packaging.

b. Remove the protective caps from the battery power connectors of the inverter and all series batteries.

c. Complete the grounding, power and communication connection between the upper and lower series batteries.

Connect the upper power connector of the lower series battery to the lower power connector of the upper series battery.

Connect the upper communication connector of the lower series battery to the lower communication connector of the upper series battery.

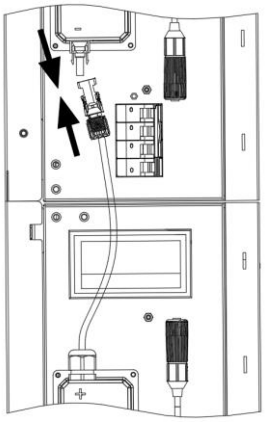

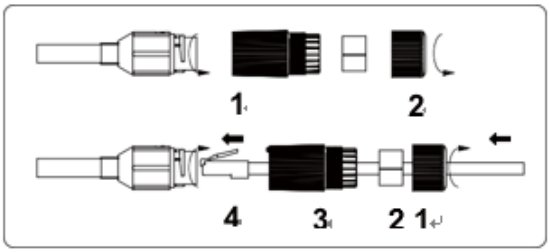

d. Use the provided grounding cable to connect the grounding point of the inverter and the grounding point of the top battery.
e. Take out the red power cable, connect BAT main positive of series batteries (directly below the inverter) to the BAT positive connector of inverter.
f. Take out the black power cable, connect BAT main negative of series batteries (the last series battery) to the BAT negative connector of inverter.

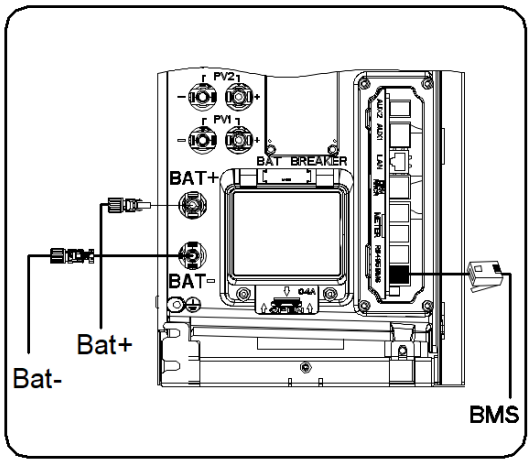

Inverter side

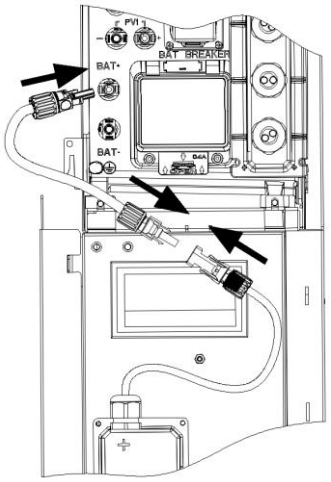

Positive connection between BAT and INV

System wiring diagrams for inverter and series batteries are as follows:

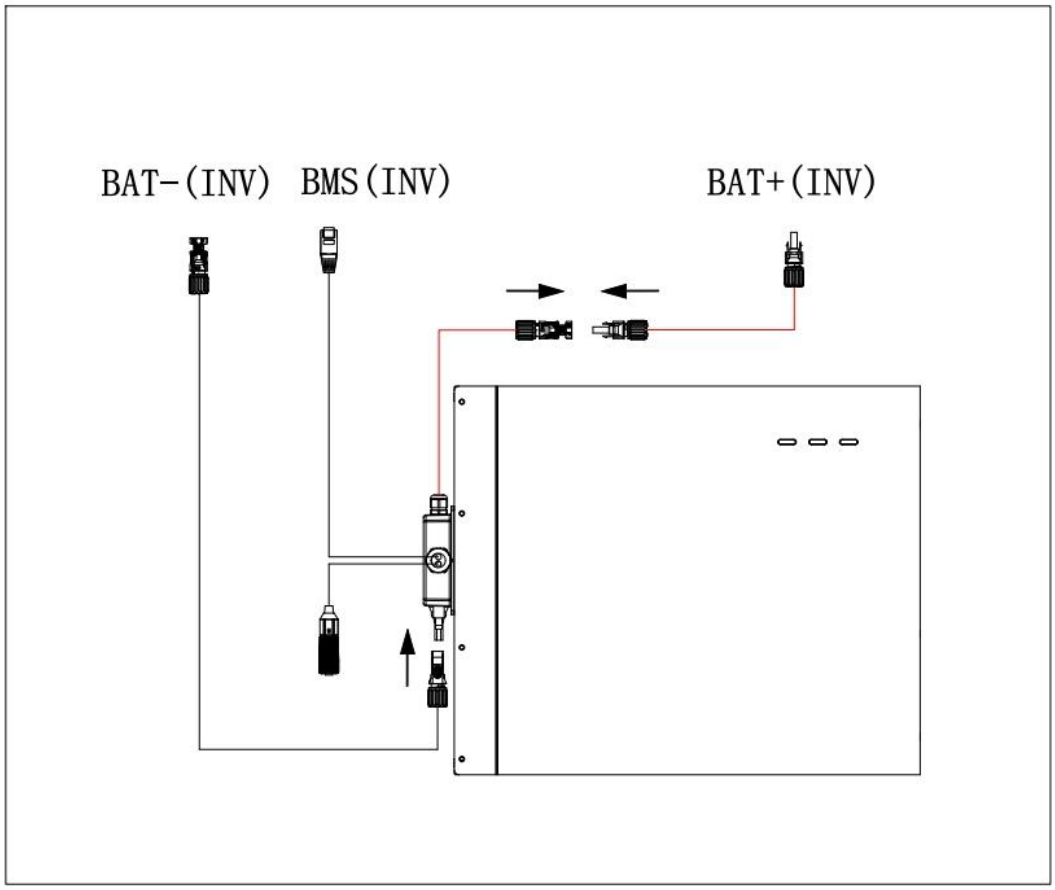

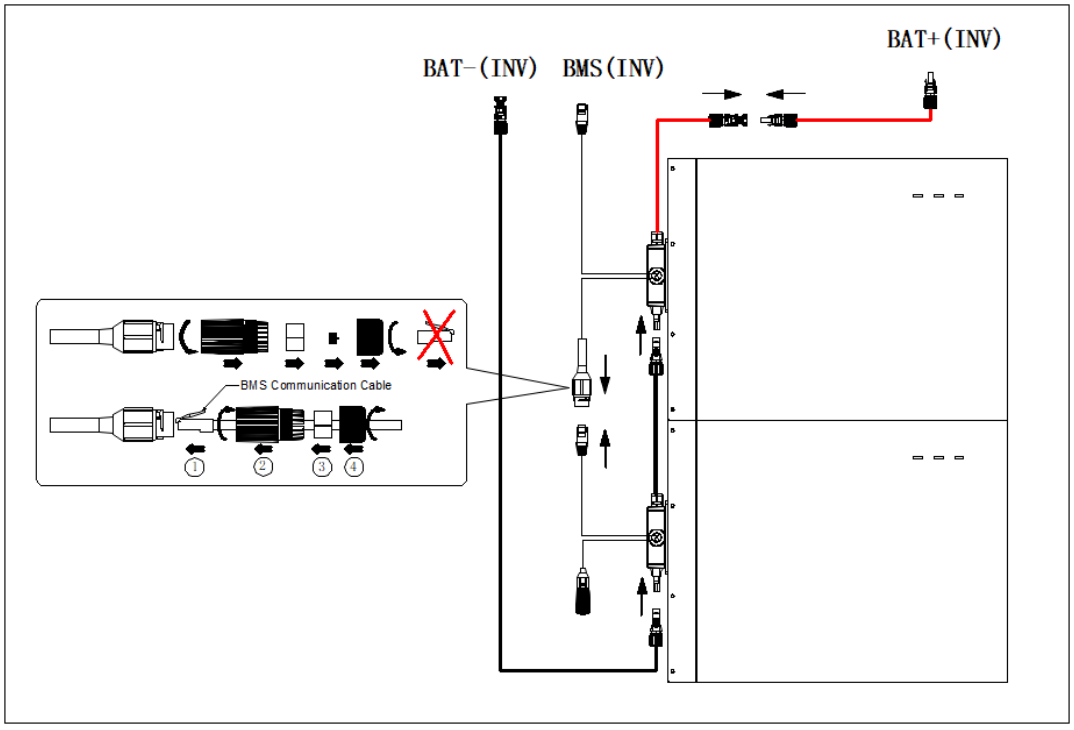

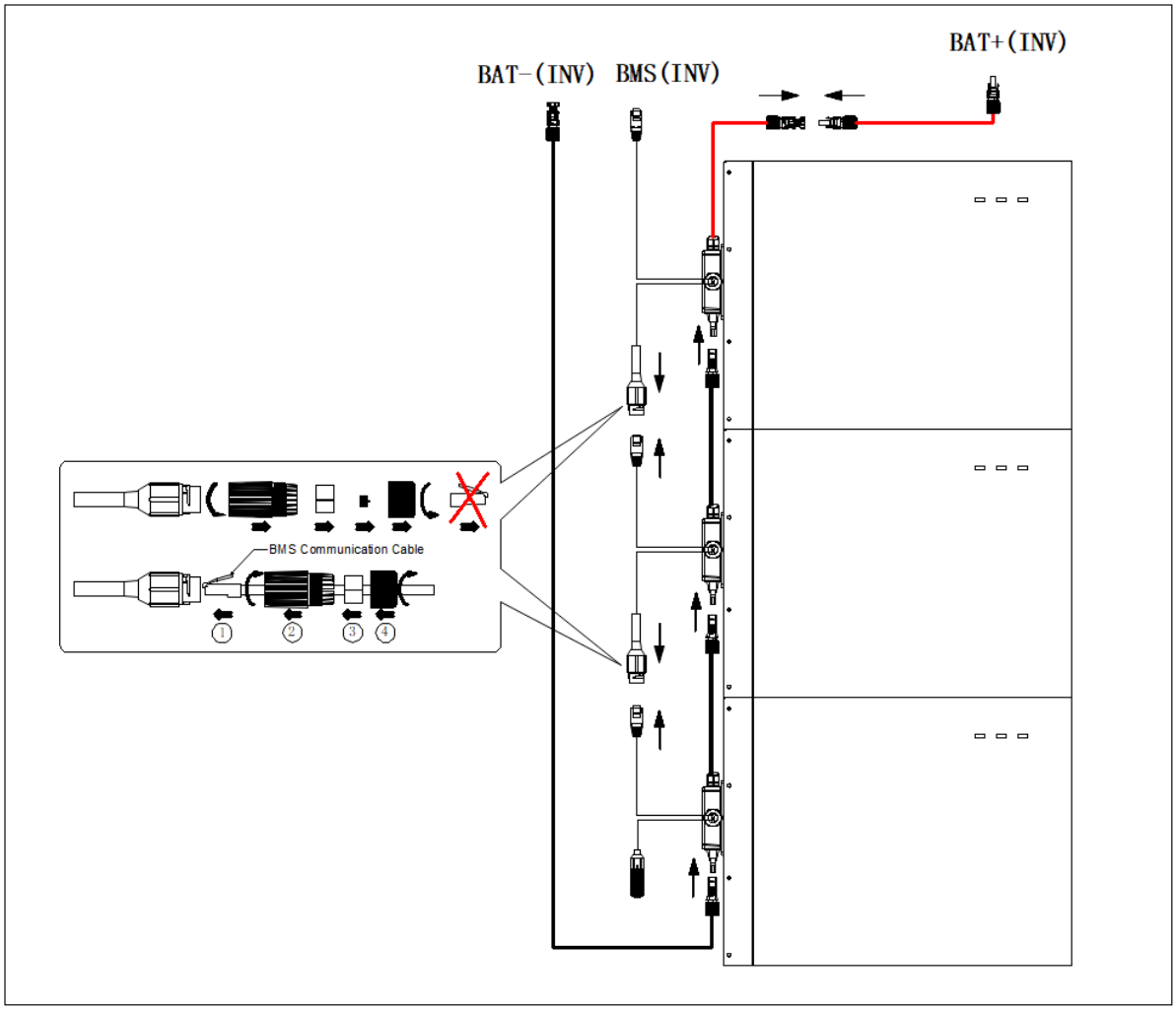
BAT+(INV)
BAT−(INV)
BMS(INV)
BMS Communication Cable
1
2
3
4

Cables connection between the Inverter and series batteries of two column.

Cables for distanced horizontal series batteries expansion should be purchased additionally.
Please pay attention to the cable type. There are three kinds of cables:

No.	Picture	Description
1	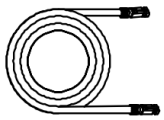	The main negative power cable (black) of the system (3m): Connect BAT main negative of series battery and the BAT negative of inverter
2	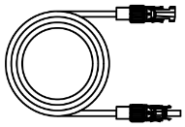	The power cable between different column series battery (3m): Connect BAT negative of the bottom battery of first column series battery and BAT positive of the top battery of second column series battery
3	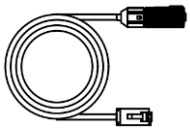	The battery communication cable (3m): Connect the lower communication connector of the bottom battery of first column series battery and the upper communication connector of the top battery of second column series battery

Detailed electrical connection between the inverter and the second series batteries as follows:
a. Disconnect the energy storage system from all voltages sources prior to performing any work on the system.
b. Installer should prepare the grounding cable to connect the grounding points between the two column series battery.
Take out M5 Y terminals and grounding conductor, strip the insulation of the grounding conductor, insert the stripped conductor into the terminal lug and crimp with a crimping tool.
c. Complete the electrical connection between two column series batteries.
Use the provided power cable to connect BAT negative connector of the bottom battery of first column series batteries and BAT positive connector of the top battery of second column series batteries.
Use the provided communication cable to connect the lower communication connector of the bottom battery of first column series batteries and the upper communication connector of the top battery of second column series batteries.
Use the assembled grounding cable to connect the grounding point of the bottom battery of first column series batteries and the grounding point of the bottom or top battery of second column series batteries.
e. Please remove or disassemble the original main negative power cable (2m) provided in the inverter packaging.
f. Take out the main negative power cable (3m) from accessory of Cables for Distanced Horizontal Battery Expansion, connect BAT main negative of series batteries (the last series battery) to the BAT negative connector of inverter.

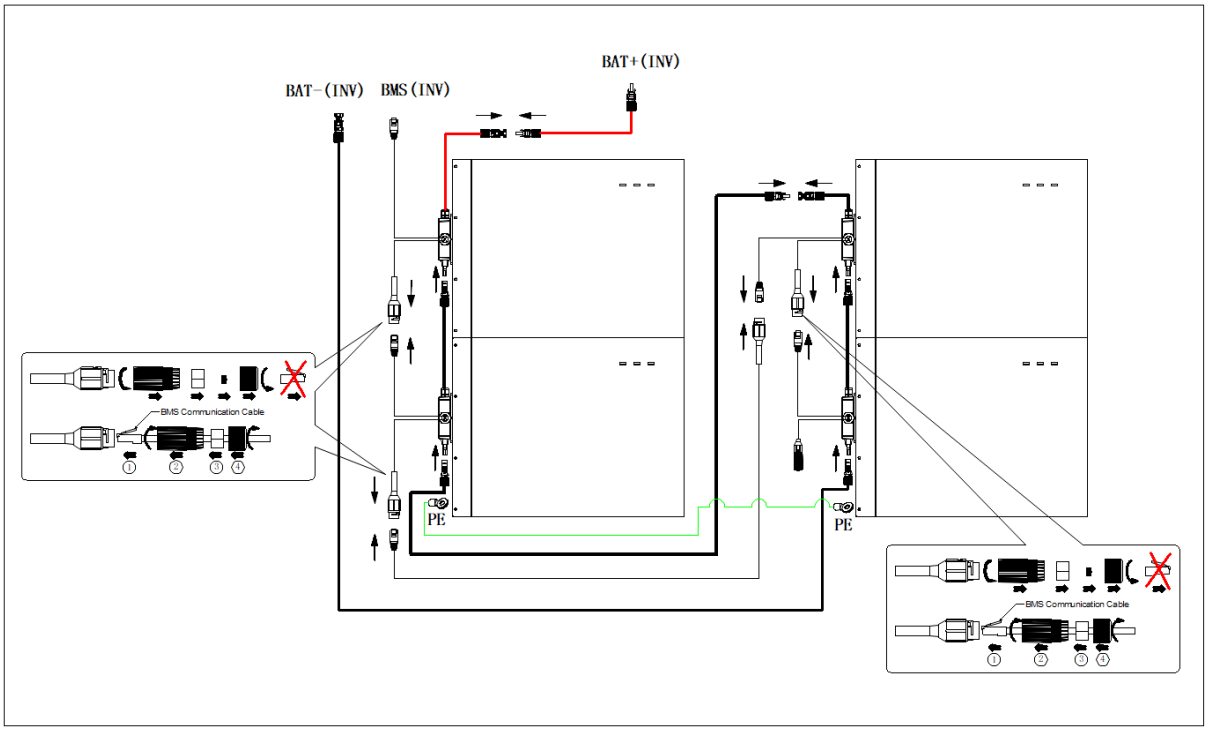
BAT+(INV)
BAT−(INV)
BMS(INV)
BMS Communication Cable
PE
PE
BMS Communication Cable

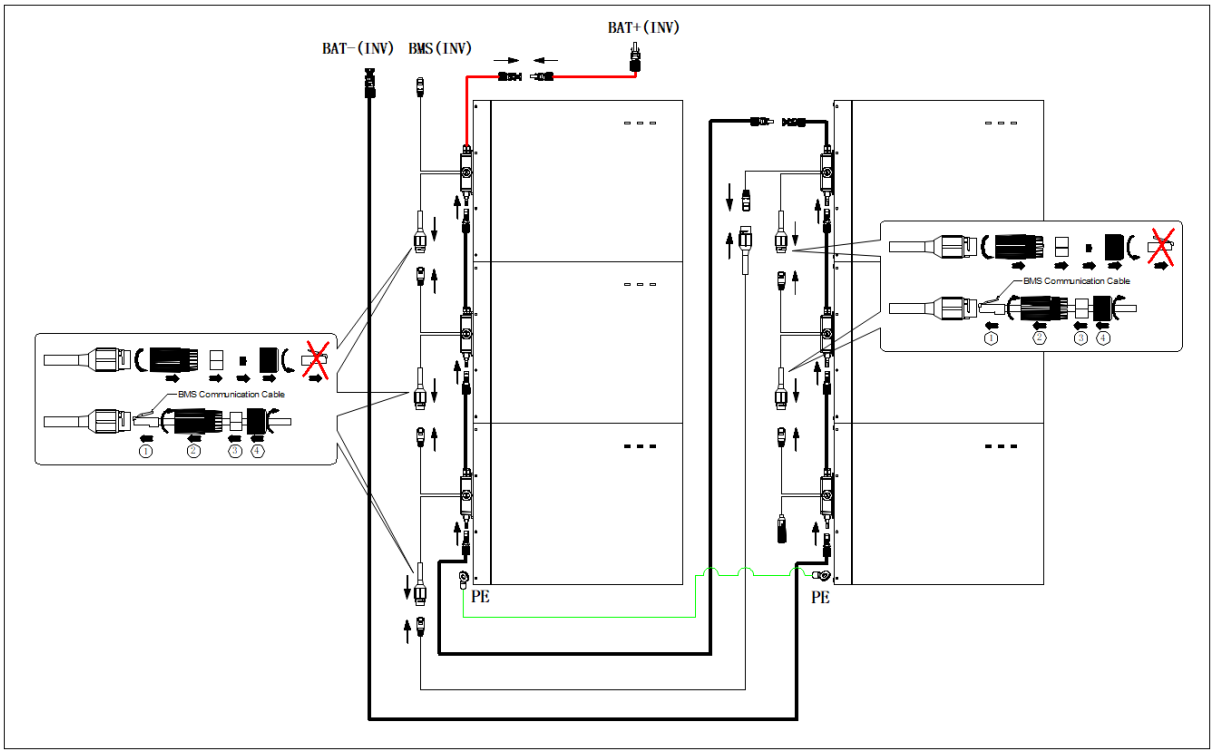
BAT+(INV)
BAT−(INV)
BMS(INV)
BMS Communication Cable
PE
PE
BMS Communication Cable

6.5.3. Disassembling BAT Connectors

To disassemble the BAT connectors (e.g. due to faulty installation), proceed as follows.

DANGER

Danger to life due to electric shock when touching exposed DC conductors or BAT plug contacts if the BAT connectors are damaged or loose

The BAT connectors can break or become damaged, become free of the DC cables, or no longer be connected correctly if the BAT connectors are released and disconnected incorrectly. This can result in the DC conductors or BAT plug contacts being exposed. Touching live DC conductors or BAT plug connectors will result in serious injury or even death due to electric shock.

- Do not disconnect the BAT connectors under load.
- Before removing the BAT connectors, ensure that the BAT circuit breakers of the battery and inverter are OFF.
- Wear insulated gloves and use insulated tools when working on the BAT connectors.
- Ensure that the BAT connectors are in perfect condition and that none of the DC conductors or BAT plug contacts are exposed.
- Carefully release and remove the BAT connectors as described in the following.

Ensure that the BAT connector can only be removed via using the removal wrench. Removing the BAT connector without the removal wrench isn't allowed and dangerous.

Procedure:

1. Release and remove the BAT connectors. To do so, insert the removal wrench into the bayonet, press the wrench with an appropriate strength to release the locking mechanism, then pull the BAT connectors out. Please do not pull on the cable.

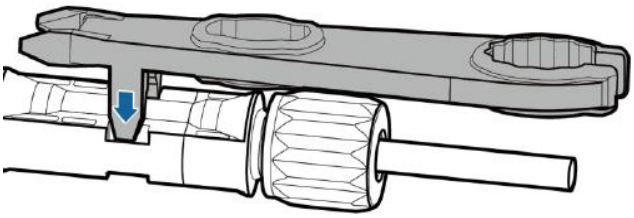

6.6. Communication Connection with Inverter

For other communication (AUX2, AUX1, LAN, RRCR, DRM, Meter, RS485) connection, please follow the steps below.

1. Unscrew the 4 screws on the COM connection cover of the inverter, then loosen the strain relief nuts of the cable glands on the COM connection cover.

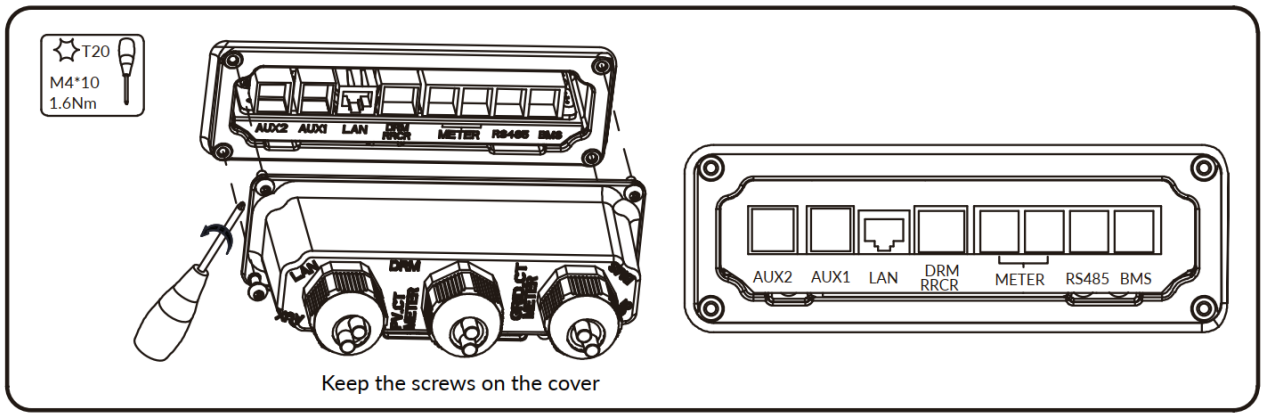

2. Pass the communication cables through the cable glands of the COM connection cover. Do not tighten the strain relief nuts of the cable glands yet.
Insert the RJ45 plugs to the relative RJ45 sockets.

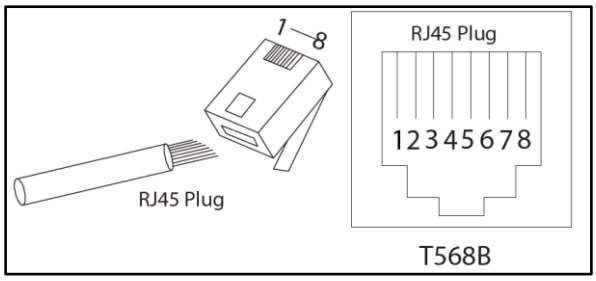

1) For meter wiring, please refer to Chapter 6.3.5.1 for Meter Wiring.
2) If DRM support is specified, the system may only be used in conjunction with a Demand Response Enabling Device (DRED). This ensures that the system implements the commands from the grid operator for active power limitation at all times. The system and the Demand Response Enabling Device (DRED) must be connected in the same network.
   Only DRM0 is available for SMILE-G3 inverter.
3) Take out 2 pcs 6-pin terminal block for AUX connection.
   For AUX position definition, please refer to the AUX wiring documentation.

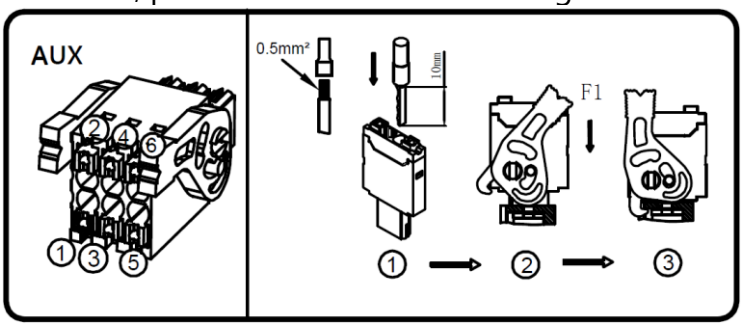

In emergency situations, such as fire, the end user can manually press the EPO (Emergency Power Off) button to shut down the inverter and switch off the battery (except for the PV array). End users or installer should prepare the external EPO.

AUX cable requirements: outdoor shielded copper cable (flexible); recommended conductor cross-section 0.5 mm^2; conductor ends should be fitted with bootlace ferrules.

To disconnect the AUX connection, rotate the handles on both sides clockwise, unplug the AUX connector, insert a screwdriver (blade width: 1.2 mm) into the relative connection position side and unplug the conductor.

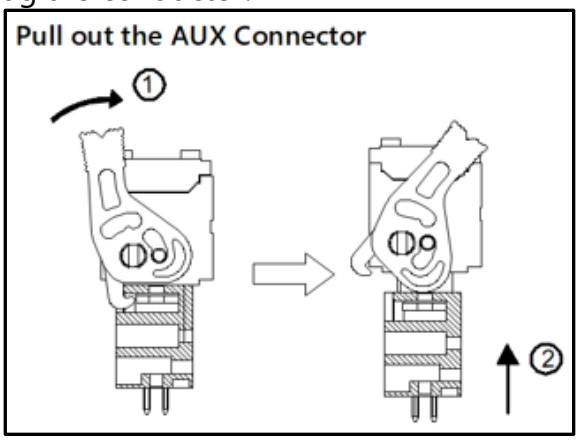

3. Place the COM connection cover against the inverter enclosure and tighten the 4 screws. When securing the cover over the communication ports, tighten the cover in place and then lightly push the communication cables into the cover as you tighten the strain relief nuts onto the cables. This will ensure the communication cables are well-seated in the RJ45 ports.
The pin definition of the communication ports:

BMS	1	2	3	4	5	6	7	8
	/	RS485_A4	/	CAN1_H	CAN1_L	/	RS485_B4	/
RS485	1	2	3	4	5	6	7	8
	12V	DEBUG_RXD_COM	GND	RS485_ B5	RS485_A5	/	DEBUG_TXD_COM	/
METER	1	2	3	4	5	6	7	8
	/	/	RS485_A7	/	/	RS485_B7	/	/
DRM	1	2	3	4	5	6	/	/
	DRED 1/5	DRED 2/6	DRED 3/7	DRED 4/8	REF GEN/0	COM LOAD/0	/	/

AUX	1	2	3	4	5	6
	DO1_NO	DO1_COM	DO1_NC	DI_negative	DI_positive	GND
Electrical Parameters	2A 24VDC	2A 24VDC	2A 24VDC	1A 24VDC	1A 24VDC	1A
	2A 230VAC	2A 230VAC	2A 230VAC			

6.7. Mount the Covers of the Inverter and Battery

After finishing electrical connection of energy storage system, please follow the steps below.

1. Mount the cable cover of battery

Mount the cable cover of battery SMILE-G3-BAT-8.2P

a. Cut a cable hole based on the cabling routing and route the cables through the cable hole.

b. Lift the top surface of the cable cover over the top surface of the battery about 20mm, place the right edge of the cable cover against the left edge of the front cover of the battery and let the screw heads pass through the large circular holes of the right edge of the cable cover, downwards push the cable cover along the left edge of the battery front cover till the two top surfaces are flush.

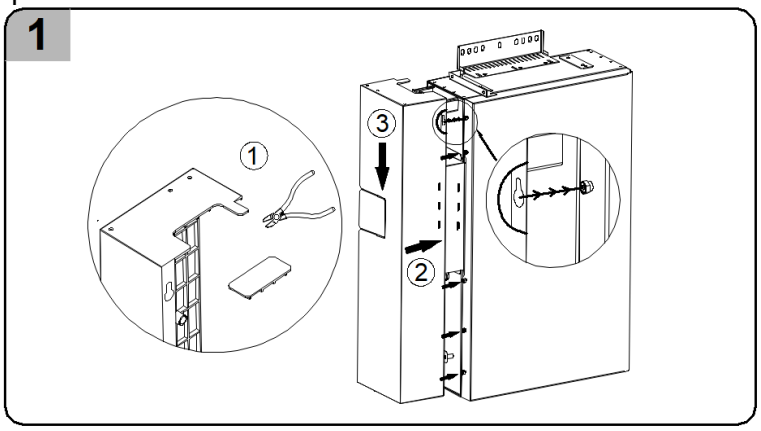

Disassemble the cable cover of the battery SMILE-G3-BAT-8.2P

a. Grasp the cable cover and lift it up by about 20mm, then move it to the left.

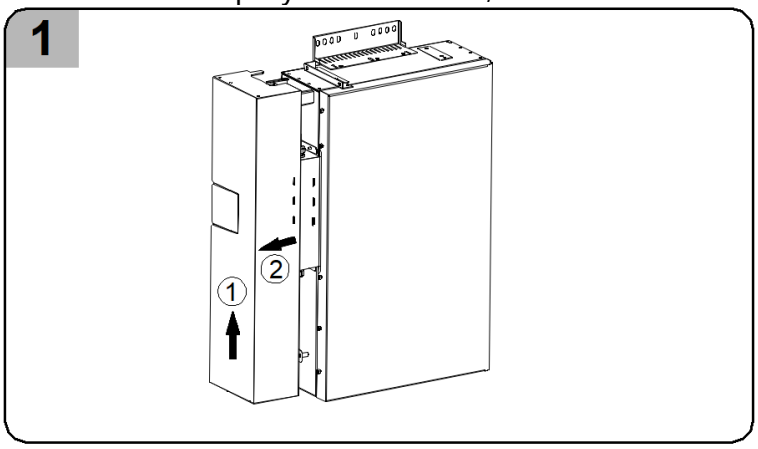

Mount the cable cover of the battery SMILE-G3-BAT-3.6S/4.0S
a. Cut a cable hole based on the cabling routing and route the cables through the cable hole.
b. Align the top surface of the cable cover to the top surface of the battery housing.
c. Align the protrusions on the right side of the cable cover to the slots on the left side of the battery's front cover.
d. Push the cable cover right to the battery housing till hear the "click" sound.

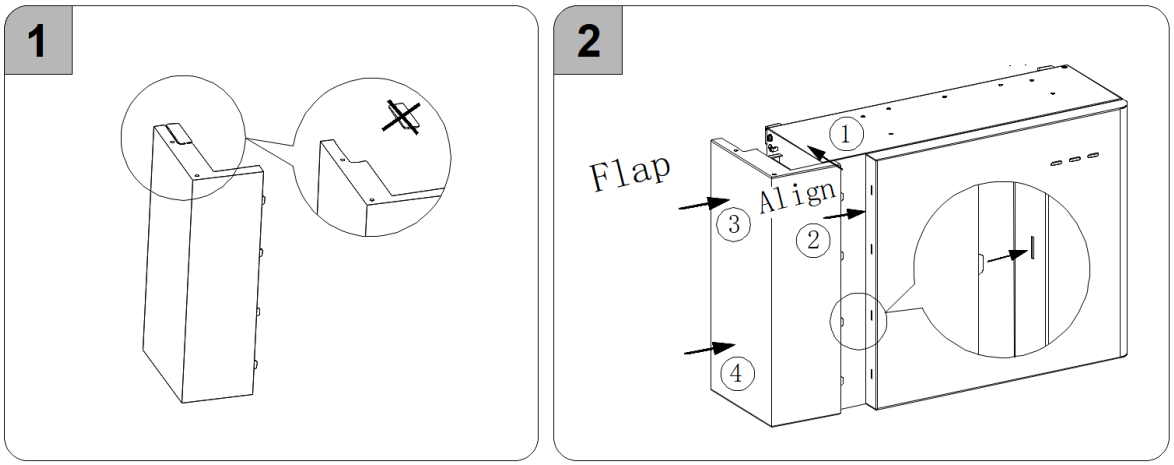

Disassemble the cable cover of the battery SMILE-G3-BAT-3.6S/4.0S
a. Grasp the cable cover, then move it to the left.

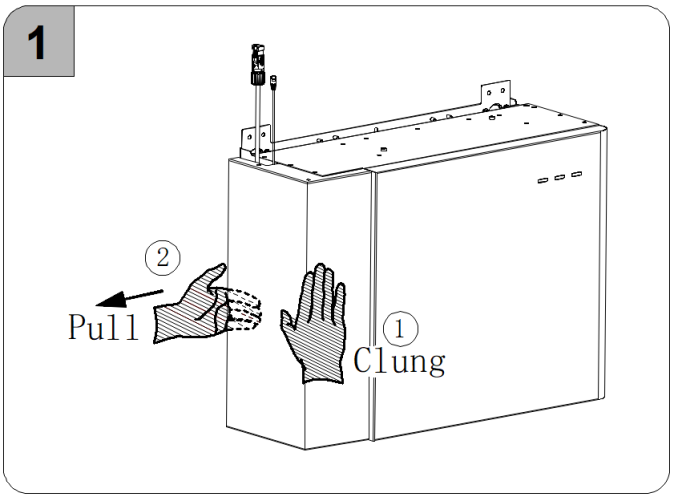

Mount the cable cover of the battery SMILE-G3-BAT-3.8S
a. Cut a cable hole based on the cabling routing and route the cables through the cable hole.
b. Tighten the two support studs for battery cable cover to the battery housing (tool: Socket wrench SW8, torque: 2.5Nm).
c. Align the four small protrusions on the right side of the cable cover to the slots on the left side of the battery's front cover, push the cable cover towards the right.
d. Secure the cable cover to the battery housing (tool: T20 screwdriver, torque: 1.5Nm).

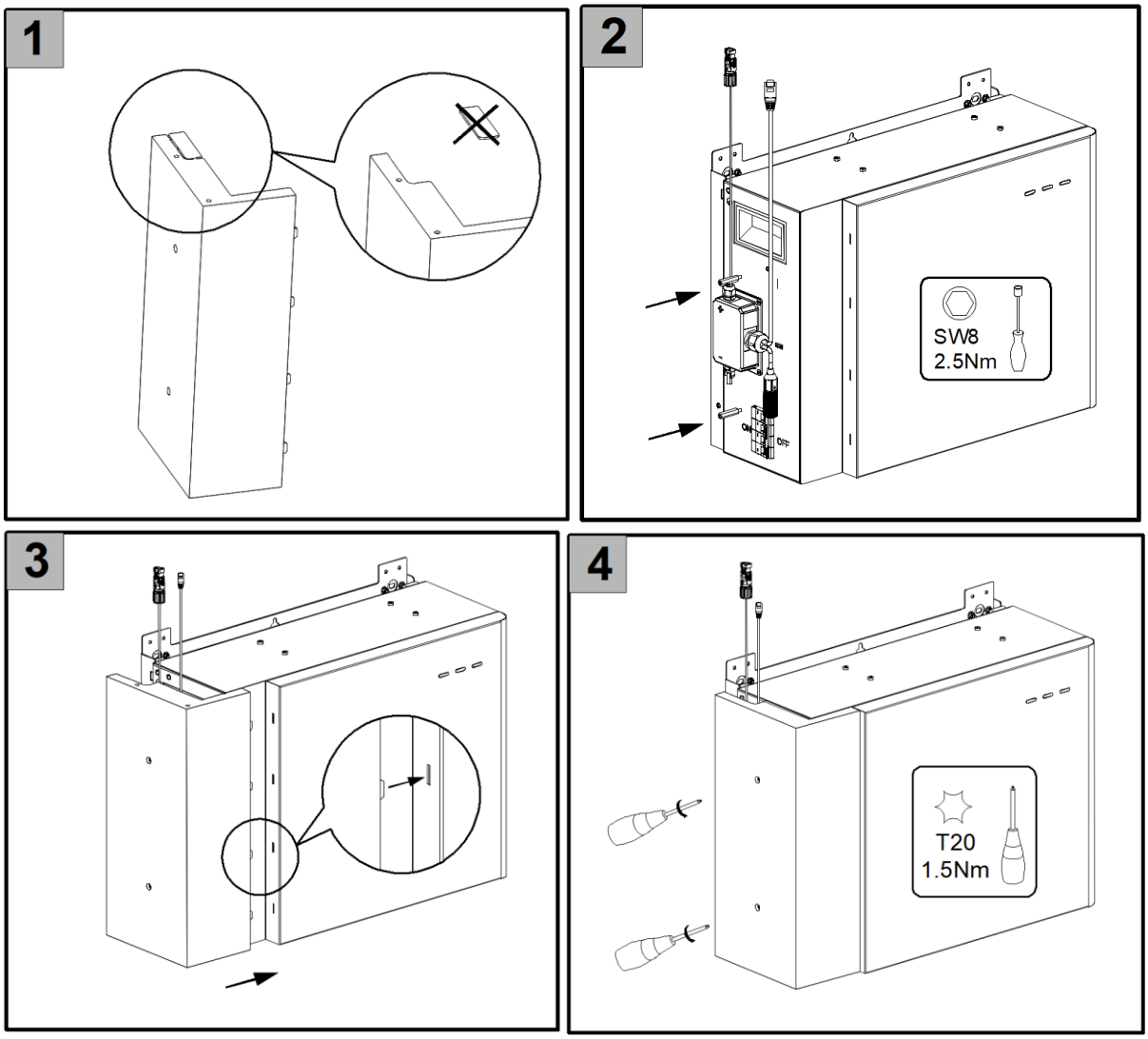

Disassemble the cable cover of the battery SMILE-G3-BAT-3.8S
a. Unscrew the two screws of the cable cover to the battery housing (tool: T20 screwdriver, torque: 1.5Nm).
b. Grasp the cable cover, then move it to the left.

2. Mount the covers of the energy storage inverter

Attach the top cover to the inverter.
Place the top cover on top of the inverter and slide it forward. The three side screws of the top cover should align to the inverter mounting threaded holes. Secure the top cover to the inverter (tool: T20 screwdriver, torque: 1.6Nm).

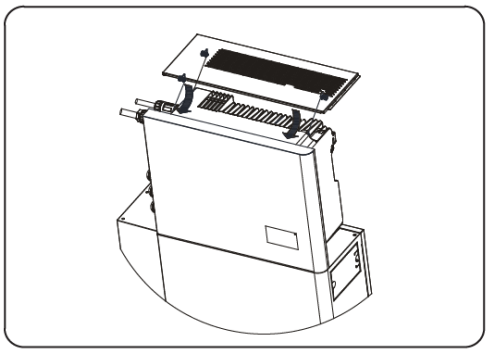

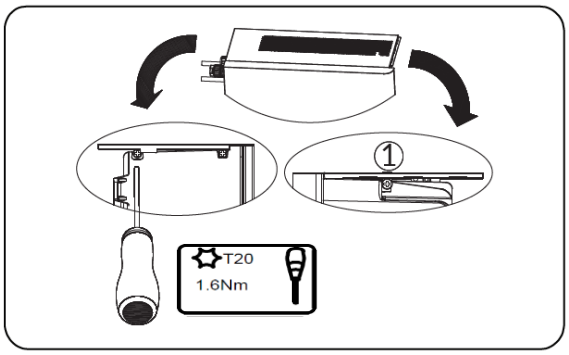

Mount left cable cover and right cover of the inverter when inverter standing on the battery, please follow the steps below.

a. Align the hooks on the front side of the right cover to the slots on the front cover side, downwards insert the right cover along the edge of the inverter front cover.
b. Cut a cable hole based on the AC cabling routing and route the cables through the cable hole.

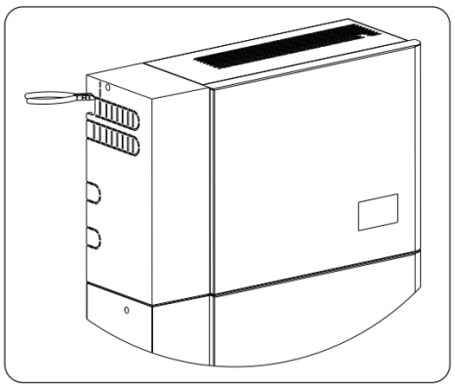

c. Align the hooks on the right side of the cable cover to the slots on the front cover side, downwards insert the cable cover along the edge of the inverter front cover.

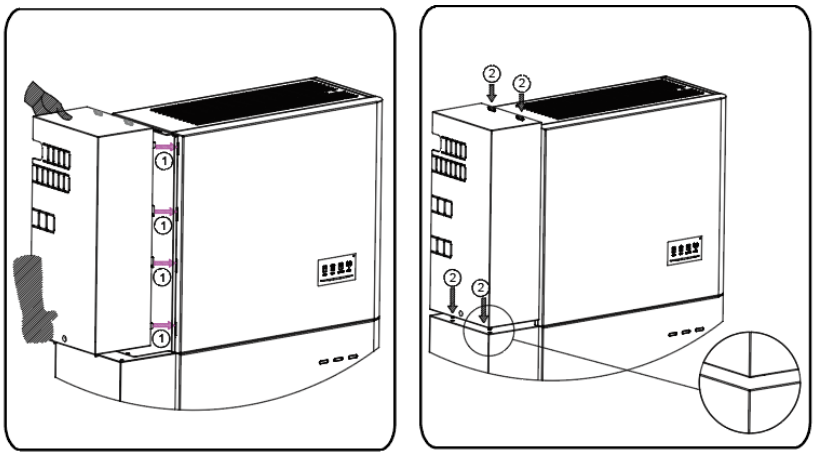

Disassemble the cable cover of the energy storage inverter

a. Insert a screwdriver (blade width: 1.2 mm) into the gap between the cable covers of the inverter and the battery and pry the cable cover up lightly.
b. Grasp the cable cover, then move it to the left.

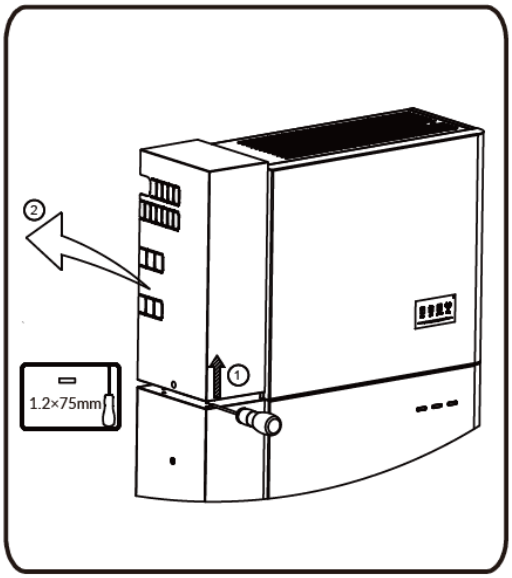

Mount left cable cover and right cover of the inverter when inverter mounting with wall bracket, please follow the steps below.

a. Take out the following material supplied from the wall bracket packaging:
   Support plate for left cable cover, hexagon head screw M5*12, pan head screw M4*10;
   Support stud for right cover, countersunk head screw M4*8;
b. Tighten the support plate for left cable cover to the bottom left edge of the inverter enclosure using one screw M5*12 (tool: T20 screwdriver, torque: 2.5Nm).
   Tighten the support stud for right cover to the bottom right edge of the inverter enclosure (tool: Socket wrench SW8, torque: 2.5Nm).

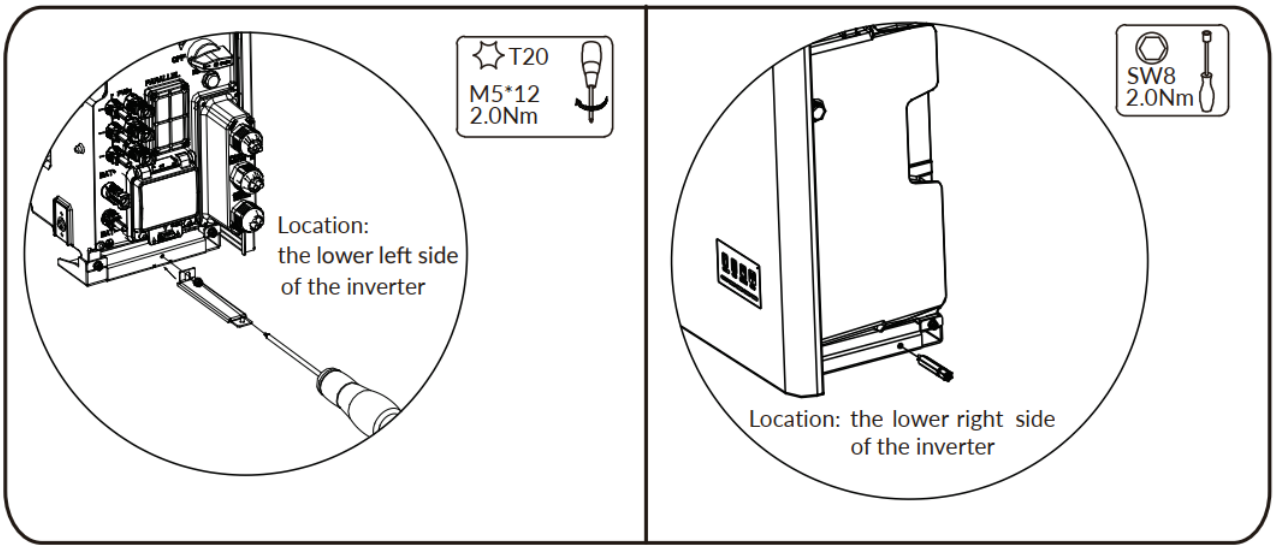

Mounting the left cable cover and right cover:

a. Tighten the support plate to the inner side of the cable cover using pan head screw M4*10 (tool: T20 screwdriver, torque: 1.6Nm).
b. Align the hooks on the right side of the cable cover to the slots on the front cover side, downwards insert the cable cover along the edge of the inverter front cover.
c. Align the hooks on the front side of the right cover to the slots on the front cover side, downwards insert the right cover along the edge of the inverter front cover.

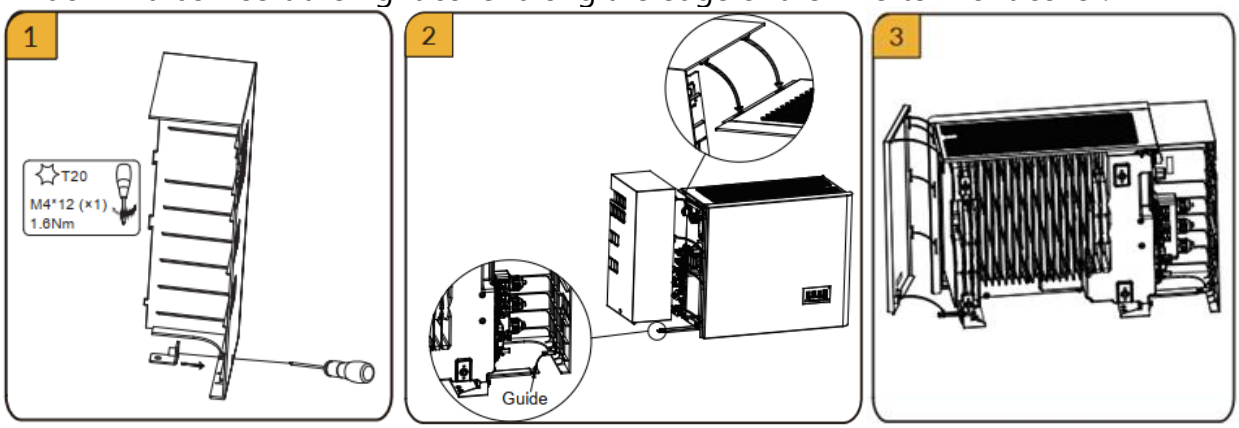

If there is a hole on the lower right of the right cover, please tighten the right cover to the inverter enclosure using T20 screw M4*8 (tool: T20 screwdriver, torque: 1.6Nm).

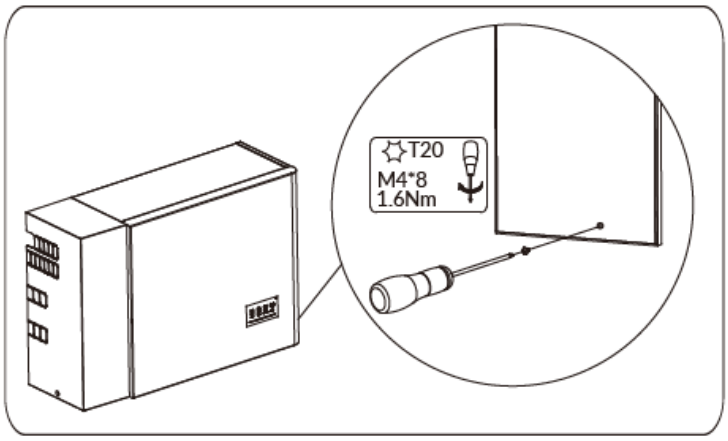

7. Operation

7.1. Power On the System

WARNING

- Before doing electrical connection, please ensure the PV switch & all AC and BAT circuit breakers in the system are switched OFF and cannot be reactivated.
- Never power on the energy storage system without the correct and reliable installation and electrical connection.

1) Switch on the battery circuit breaker which is at the lower left of the inverter.

2) Switch on the battery circuit breakers of all batteries (located on the left-hand side of the battery).

3) For series batteries, please skip this step.

Shortly press the power buttons of all parallel batteries. For more than one parallel battery installed, please press all power buttons within 30 seconds. This power button is located just beside the battery circuit breaker on each parallel battery.

4) Switch on the AC circuit breaker between the grid port of the energy storage inverter and the mains grid (this AC circuit breaker should be labelled Main Switch Battery ESS Supply or similar).

5) Switch on the AC circuit breaker between the backup port of the energy storage inverter and the loads (this AC circuit breaker should be labelled Main Switch Battery ESS Backup or similar).

6) Switch on the PV switch at the left middle of the inverter if there is PV string directly connected to the energy storage inverter.

7) Switch on the AC circuit breaker (if there is any) between any separate PV inverter and the mains grid. These separate PV inverters are also referred to as “AC-coupled PV inverters”.

7.2. Power Off the System

WARNING

After the energy storage system is powered off, the remaining electricity and heat may still cause electric shocks and body burns. Please put on protective gloves and operate the product 5 minutes after the system is powered off.

1) Switch off the AC circuit breaker between the energy storage inverter and the backed-up loads.
2) Switch off the PV DC Isolator(s) between the PV string and the energy storage inverter if there are any.
3) Switch off the PV switch on the left-hand side of the energy storage inverter (if there is PV string directly connected the energy storage inverter).
4) For series batteries, please skip this step.
   Hold the battery power button located next the battery circuit breaker for 6s to turn off each parallel battery.
5) Switch off the battery circuit breakers of all batteries (located on the left-hand side of the battery).
6) Switch off the battery circuit breaker which is at the lower left of the inverter.
7) Switch off the AC circuit breaker between the energy storage inverter and the mains grid.

8. Commissioning

8.1. Checks Before Power-On

No.	Check Item	Acceptance Criteria
1	Installation/Mounting environment	The installation environment is safe and the unit has adequate clearance as per the instruction in this manual as well as in compliance with local standards. The area around the installation should be free from clutter and should not be flood-prone.
2	Battery and inverter mounting	The battery and inverter should be mounted correctly, securely, and reliably.
3	Wi-Fi mounting	The Wi-Fi module should be mounted correctly, securely, and reliably.
4	Cable layout	Cables should be routed neatly and protected adequately where exposed, in accordance with standards.
5	Cable tie	Cable ties should be secured and trimmed evenly and no burr exists.
6	Grounding	The grounding cables should be connected correctly, securely, and reliably. Impedance/resistance checks should be conducted to confirm reliable Earth connections.
7	Switches and breakers status	The PV switch (if there is any) and battery breakers and any breakers connecting to the system should be OFF.
8	Cable connections	The AC cables, PV cables (if there are any), battery power cables, and communication cables should be connected correctly, securely, and reliably.
9	Unused ports	Unused power ports and communication ports should be sealed from water or dust ingress by watertight caps.

8.2. Power on the Product before Commissioning

WARNING

- Before doing electrical connection, please ensure the PV switch & all AC and BAT circuit breakers in the system are switched OFF and cannot be reactivated.
- Never power on the energy storage system without the correct and reliable installation and electrical connection.
- Don't switch on the PV switch on the energy storage inverter.
- Don't switch on the AC circuit breaker on the PV inverter (if there is any).

- Switch on the battery circuit breaker at the left middle of the energy storage inverter.
- Switch on the battery circuit breakers of all batteries.
- Press the battery power button of the parallel battery (For series battery, there is no battery power button).
- Switch on the external AC circuit breaker between the grid and the energy storage inverter.
- Please strictly follow the aforementioned steps to power on the system.

8.3. Wi-Fi Module Configuration and Basic Parameters Settings

8.3.1. Download and Install the App

1. Android device users can download the App through major Android App stores such as Google Play.
2. IOS device users can search for “AlphaESS” in the App Store and download the App.

AlphaESS App

8.3.2. Wi-Fi Configuration

This section is for user who has an energy storage system with a Wi-Fi module.
The AlphaESS App is used to configure the network, set system basic parameter, monitor system operating status and check configuration information.

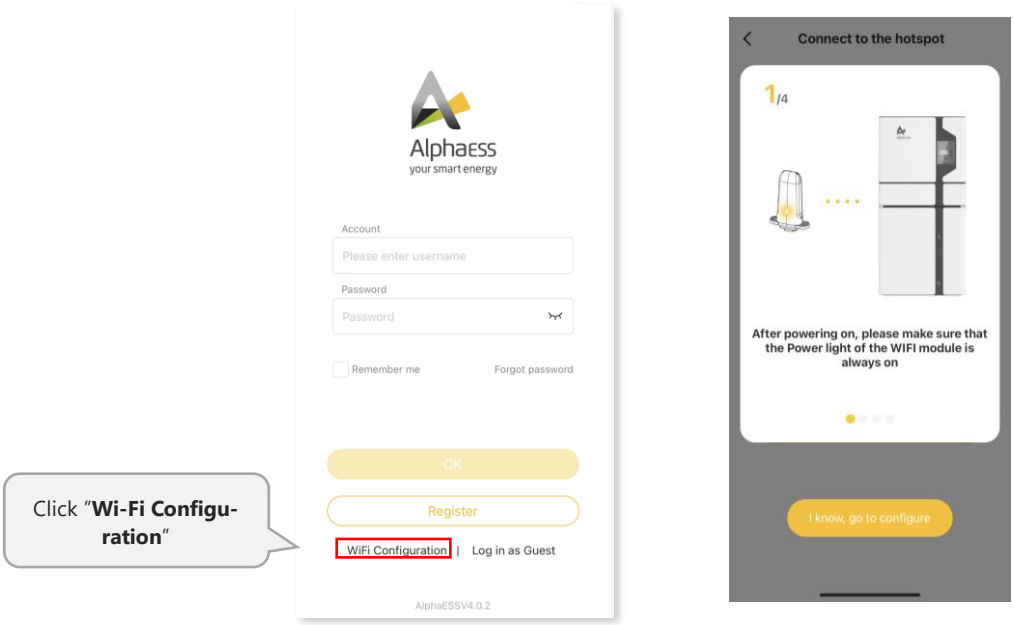

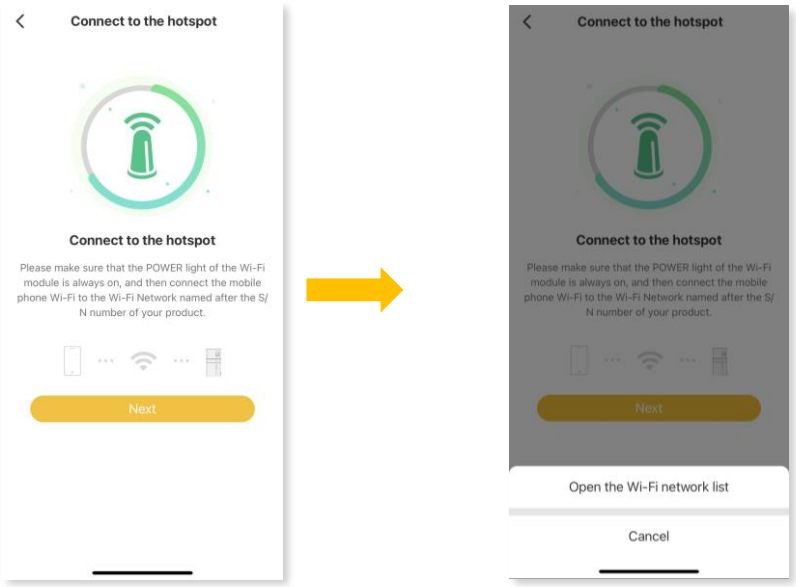
Connect to the hotspot
Connect to the hotspot
Please make sure that the POWER light of the Wi-Fi module is always on, and then connect the mobile phone Wi-Fi to the Wi-Fi Network named after the S/N number of your product.
Next
Connect to the hotspot
Connect to the hotspot
Please make sure that the POWER light of the Wi-Fi module is always on, and then connect the mobile phone Wi-Fi to the Wi-Fi Network named after the S/N number of your product.
Next
Open the Wi-Fi network list
Cancel

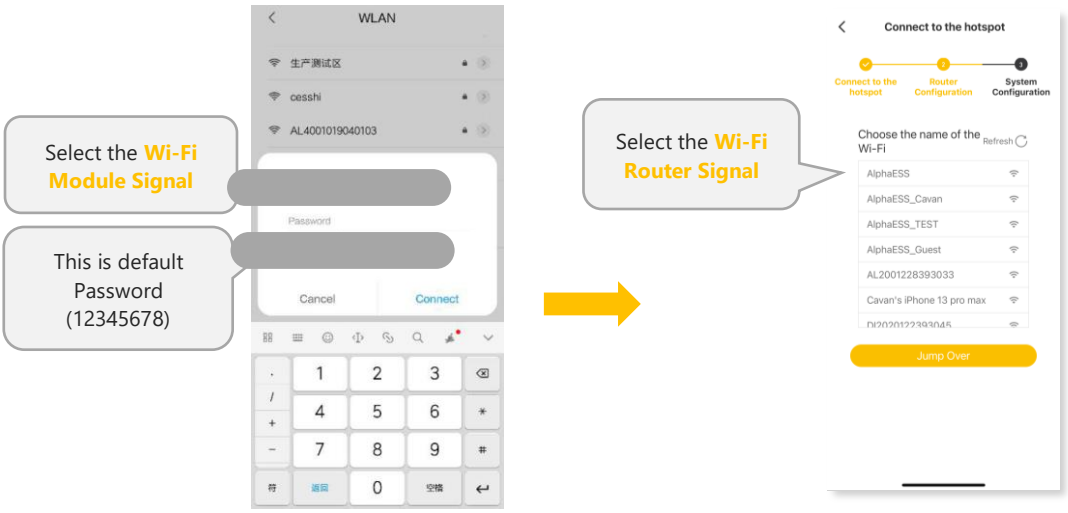
Select the Wi-Fi Module Signal
This is default Password (12345678)
WLAN
生产测试区
cesshi
AL4001019040103
Password
Cancel
Connect
Select the Wi-Fi Router Signal
Connect to the hotspot
Connect to the hotspot
Router Configuration
System Configuration
Choose the name of the Wi-Fi
Refresh
AlphaESS
AlphaESS_Cavan
AlphaESS_TEST
AlphaESS_Guest
AL2001228393033
Cavan's iPhone 13 pro max
Jump Over

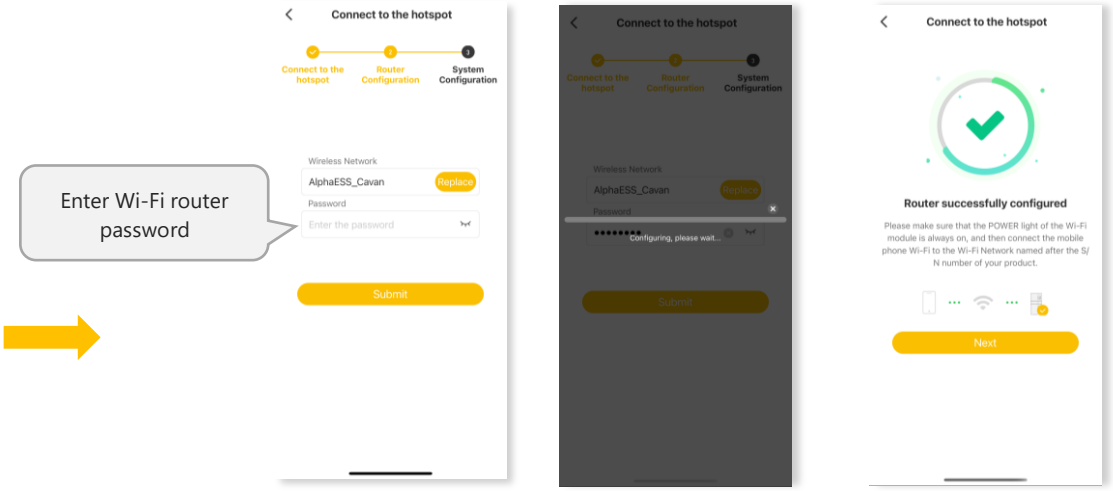
Enter Wi-Fi router password
Connect to the hotspot
Connect to the hotspot
Router Configuration
System Configuration
Wireless Network
AlphaESS_Cavan
Replace
Password
Enter the password
Submit
Connect to the hotspot
Connect to the hotspot
Router Configuration
System Configuration
Wireless Network
AlphaESS_Cavan
Replace
Password
Configuring, please wait...
Submit
Connect to the hotspot
Router successfully configured
Please make sure that the POWER light of the Wi-Fi module is always on, and then connect the mobile phone Wi-Fi to the Wi-Fi Network named after the S/N number of your product.
Next

NOTICE

• The system will not be able to connect to the internet without either a physical LAN cable connection or configured Wi-Fi if the Wi-Fi module is used.

• To ensure account security, change the password periodically and keep the new password in mind. Not changing the initial password may cause password disclosure. A password left unchanged for a long period of time may be stolen or cracked. If a password is lost, devices cannot be accessed.

8.3.3. Basic Parameters Settings

Meter Setting on AlphaCloud

Step 1:

When the system work mode is selected as “DC”, click the slider under the item “Grid Meter” to turn the “Meter” icon orange.

When the system work mode is selected as “AC” or “Hybrid”, click the sliders under the items “Grid Meter” and “PV side meter” to turn the “Meter” icons orange.

Step 2:

Click "Save" and wait a few minutes to refresh the page.

When the “Meter Model” displays DTSU666 model, the setting is successful.

> **CAUTION**
>
> Do not modify the “Meter CT Ratio”.

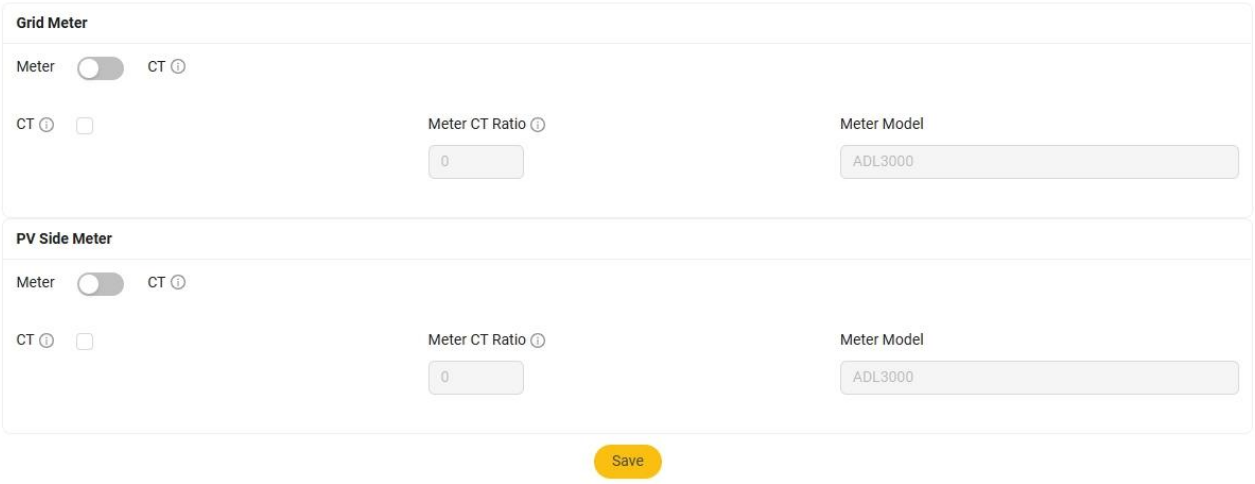

Meter Setting on the AlphaESS App

Step 1:

When the system work mode is selected as “DC”, only tick the "Meter" icon on the right of the “Grid Meter”.

When the system work mode is selected as “AC” or “Hybrid”, tick the two "Meter" icons on the right of the “Grid Meter” and the “PV Meter”.

Step 2:

Click "Submit" and enter the “System information” page to check the meter model. When the “Meter Model” displays DTSU666 model, the setting is successful.

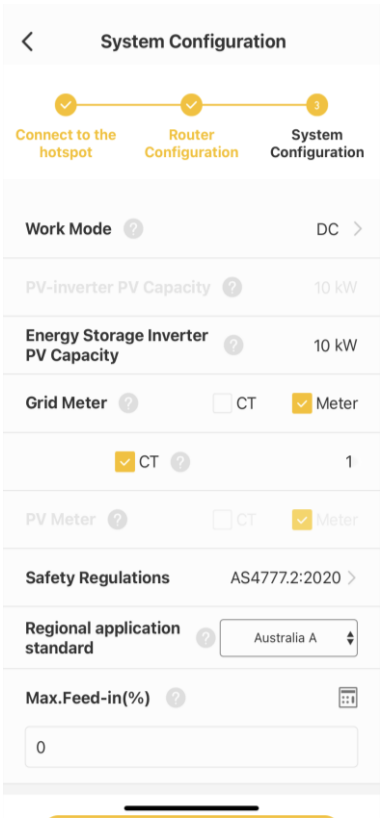

CAUTION

Do not modify the “CT” ratio.

Parameters Settings

DC Mode

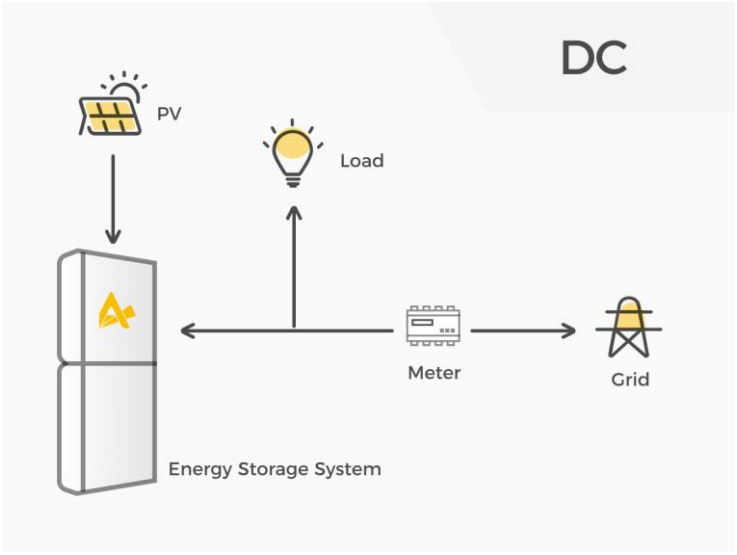



AC Mode

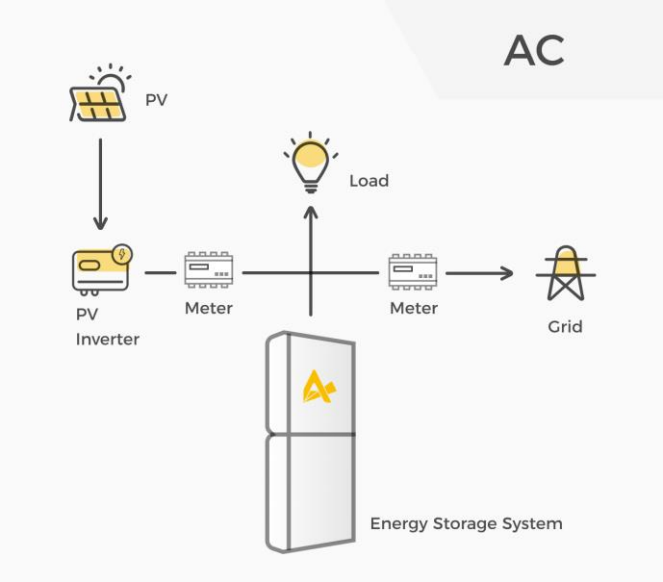

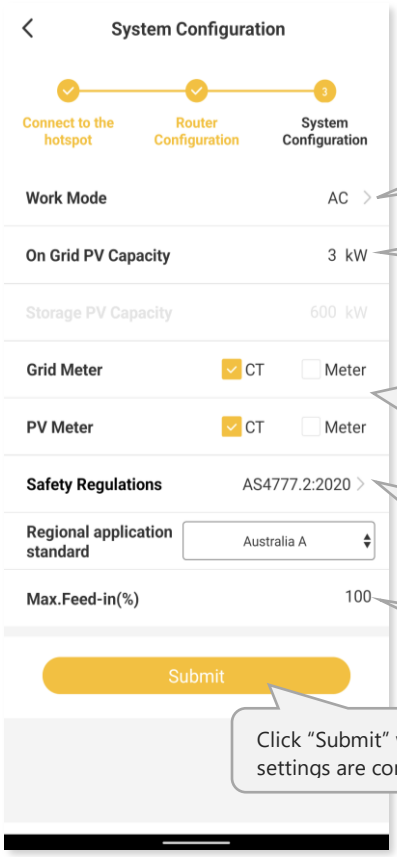

Three mode options: DC/**AC**/Hybrid

PV installed capacity on the PV-inverter (on-grid) side

If the grid meter is installed, please select "Meter" for the grid side.
If the meter with CT, please select "CT" below.
If the meter without CT, please do not select "CT" below.

Please refer to the above steps to perform the setting of the PV inverter side.

Note: When the safety standard is set as AS4777.2 (Australia and New Zealand), the secondary sub-options can be selected according to the region or local grid company.

You can set the allowable feed-in ratio from 0%-100%.

Click "Submit" when the settings are completed.

Hybrid Mode

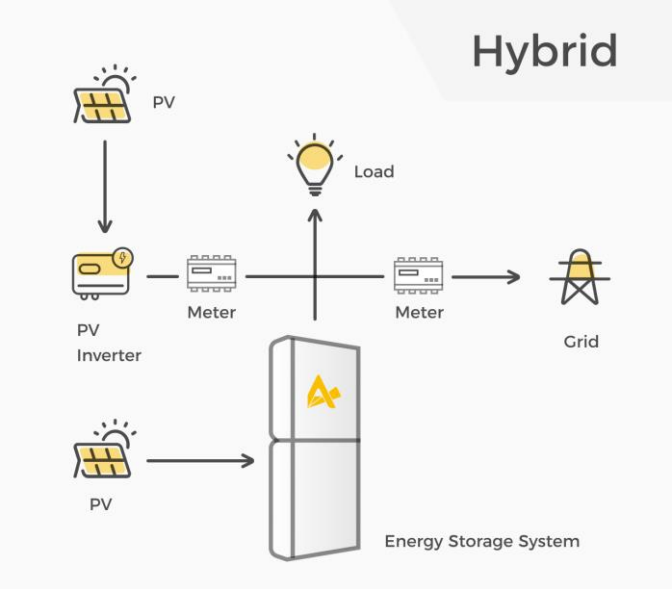

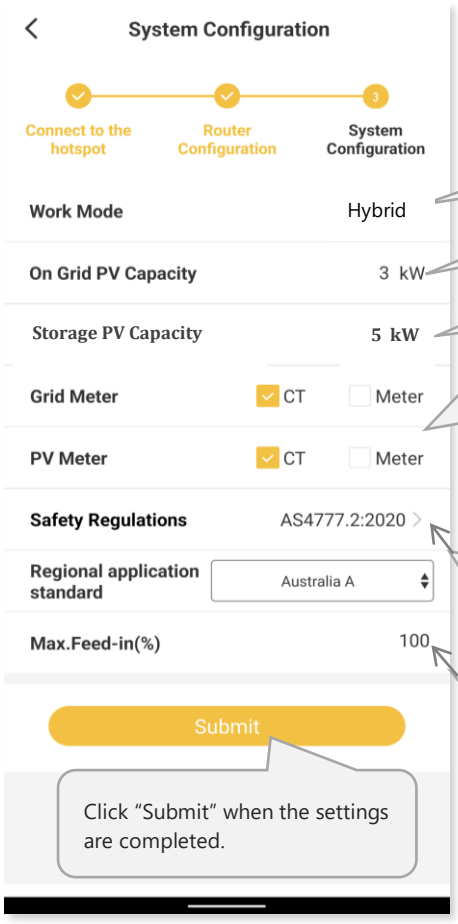

Three mode options: DC/AC/**Hybrid**

PV installed capacity on the PV-inverter (on-grid) side

Storage PV installed capacity: PV capacity on the energy storage inverter side

If the grid meter is installed, please select "Meter" for the grid side.
If the meter with CT, please select "CT" below.
If the meter without CT, please do not select "CT" below.

Please refer to the above steps to perform the setting of the PV inverter side.

Note: When the safety standard is set as AS4777.2 (Australia and New Zealand), the secondary sub-options can be selected according to the region or local grid company.

You can set the allowable feed-in ratio from 0%-100%.

CAUTION

The safety standard field must be set correctly

If you select a safety standard that is not valid for your country, region and purpose, it can cause a disturbance in the energy storage system and lead to problems with the Network Operator. When selecting the safety standard, you must always observe the locally applicable standards and directives as well as the properties of the PV system (e.g. PV system size, grid-connection point).

• If you are not sure which safety standard is valid for your country, region or purpose, contact your Network Operator for information on which safety standard should be used.

NOTICE

A Note on setting Feed-In limits with multiple PV systems

If the AlphaESS product is installed with DC-connected Solar Panels as well as with an existing AC-coupled PV system, Installers may need to set a Feed-In limit to comply with Local Regulations.

The Feed-in limit should be set to the total Phase feed-in limit set by the Network Operator, regardless of the size of the existing AC-coupled PV system. Only set the feed-in limit to *zero* if the Network Operator has dictated *zero feed-in* from the house.

8.4. Installing New System and Settings on the App

8.4.1. Register as an Installer

If you don’t have an installer account, please register first.

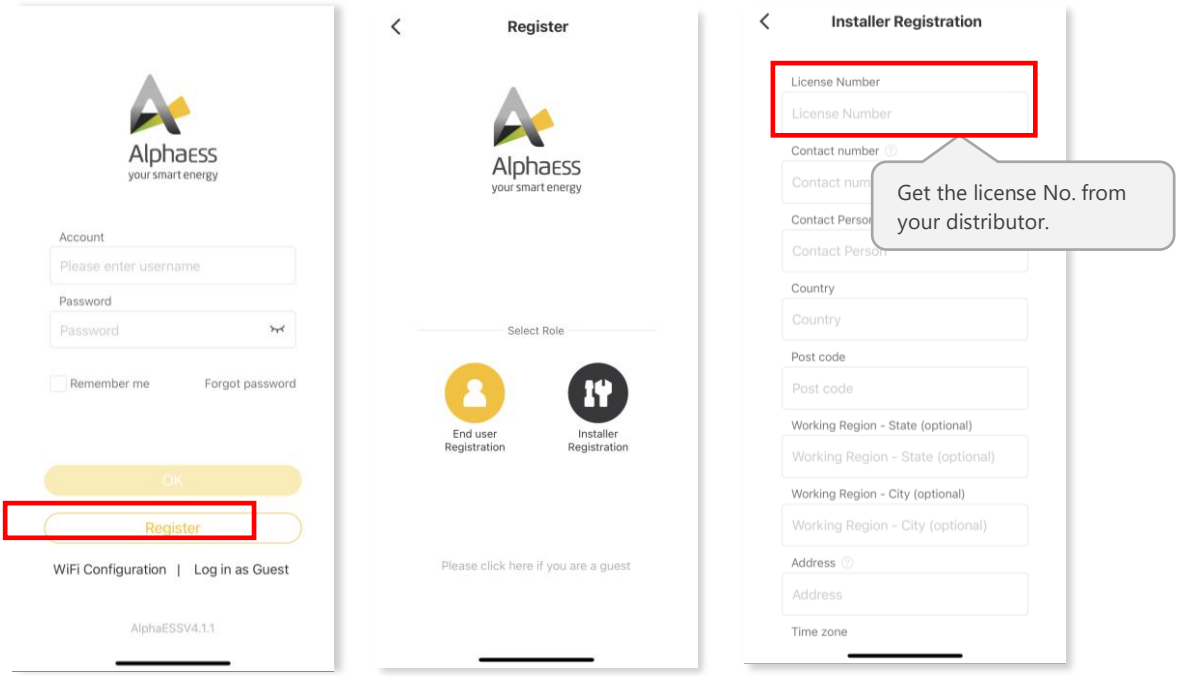

If you already have an installer account, please log in directly.

8.4.2. Overview of Functions for Installer Account

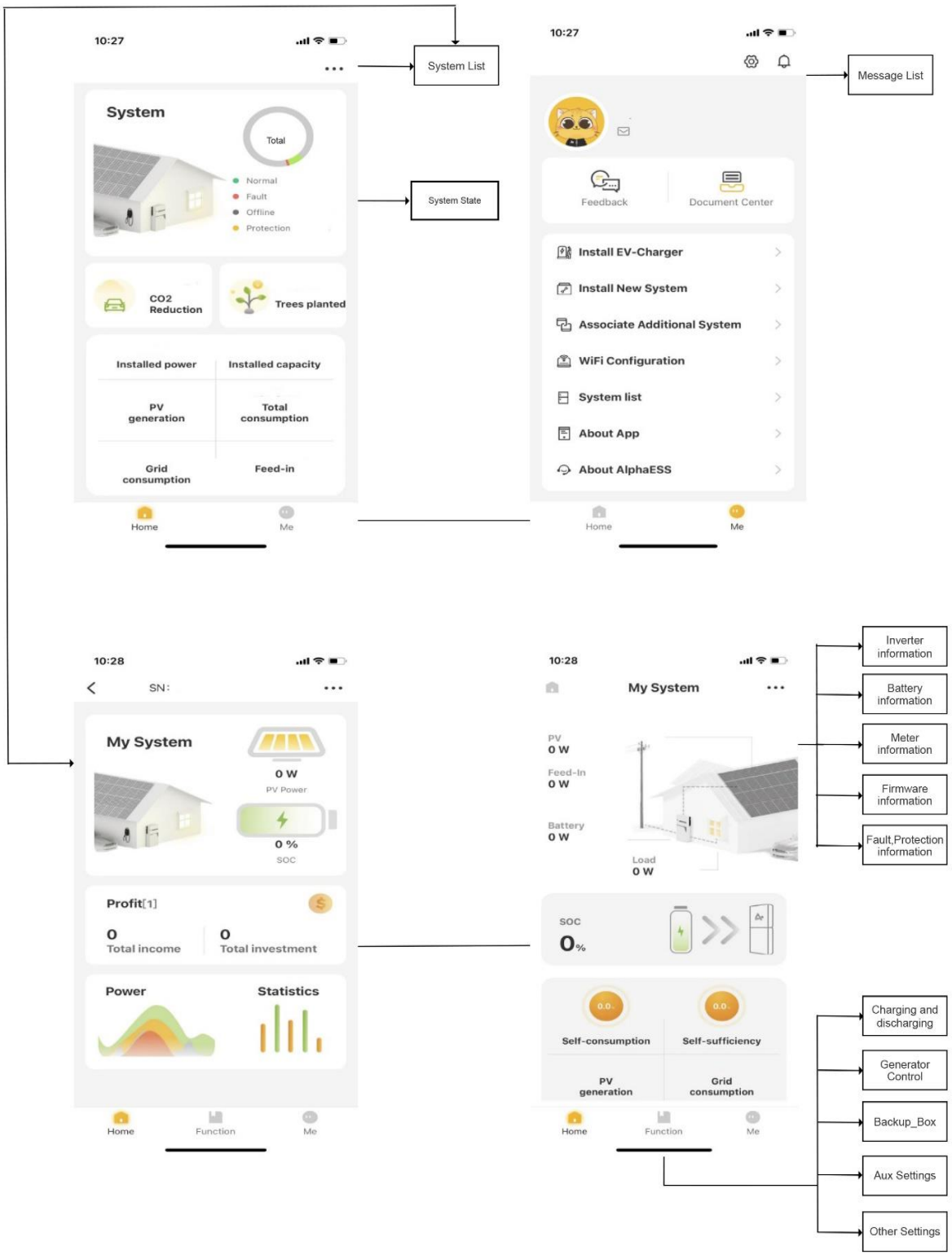

8.4.3. Install New System on the App

You can carry out “Install New System” as follows:

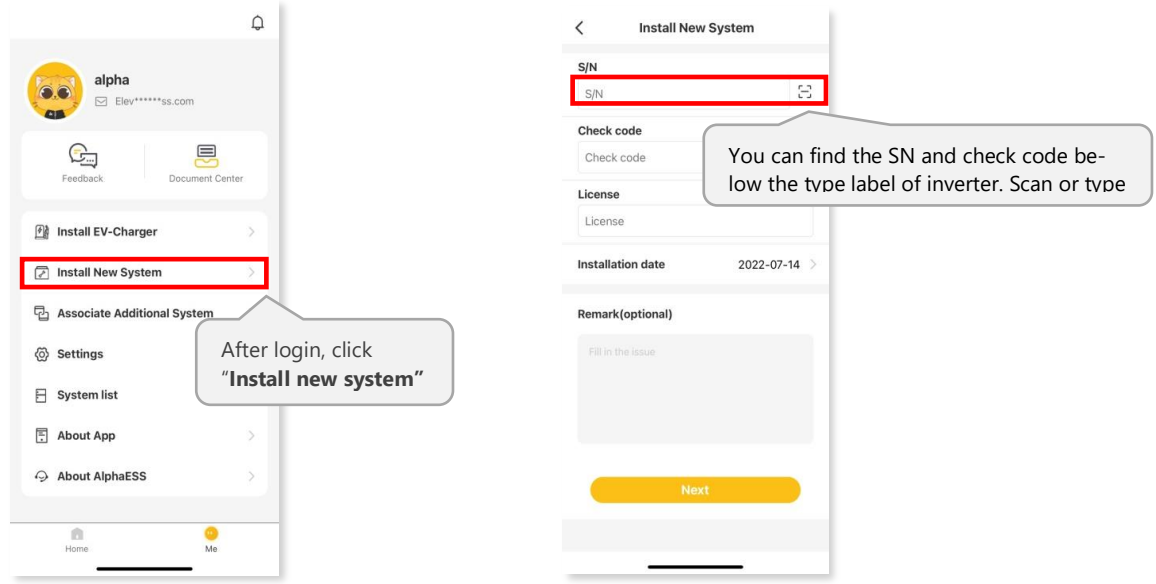

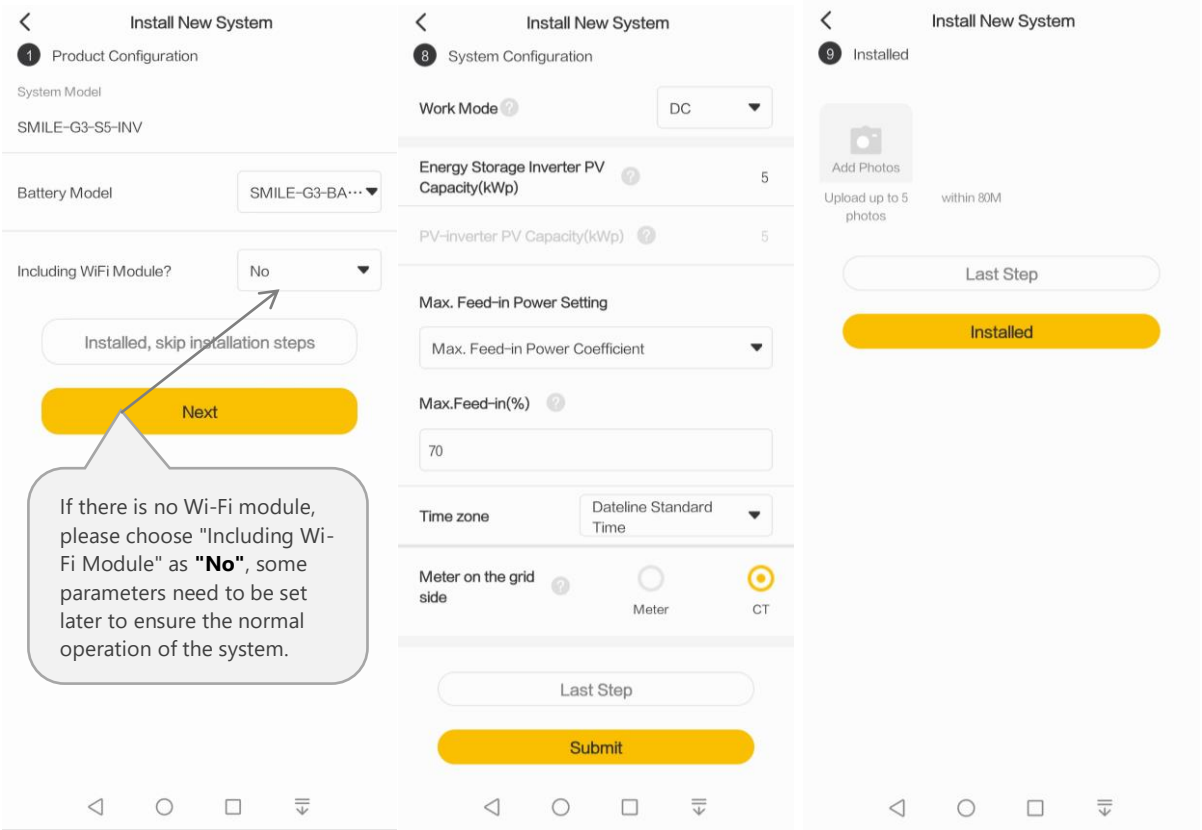

For regular installers, please click “Install New System”, enter your installer account ID in the “license” field to bind the system to your account and “activate” the system. Enter S/N, check code, license, installation time and click the “save” button.

Only for Australian installers, they need to do more settings. If you are an Australian installer, you will need to fill in the Street (NMI), Suburb (NMI) and Postcode (NMI) fields and the Region field, which has six fixed options (NSW, QLD, VIC, SA, TAS, WA). If SA is selected for Region, two more fields are added which are Agent and NMI. These fields are required in order to meet the requirements of the Network Operator for Dynamic Export and for PV output control by a Relevant Agent.

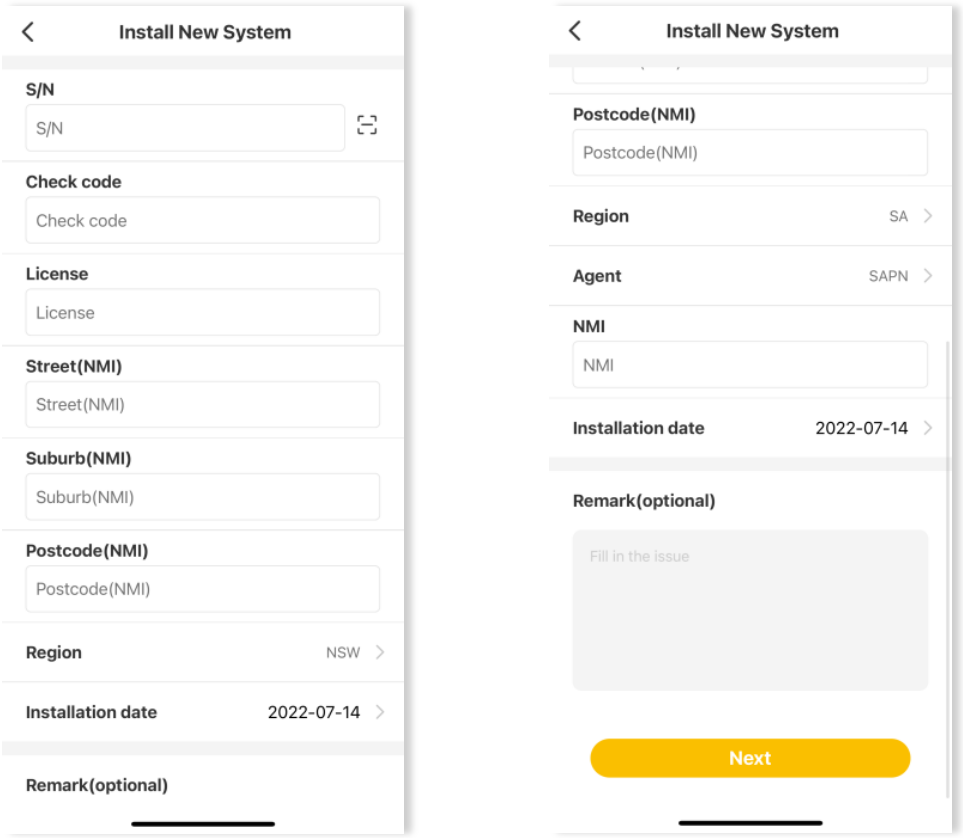

Australian Installer

Fields that are not marked "optional" need to be filled in.

Click "Next".

8.4.4. Instruct the End User to Install the App

Please make sure that end user has downloaded the App, registered the account correctly, and bound the system SN.

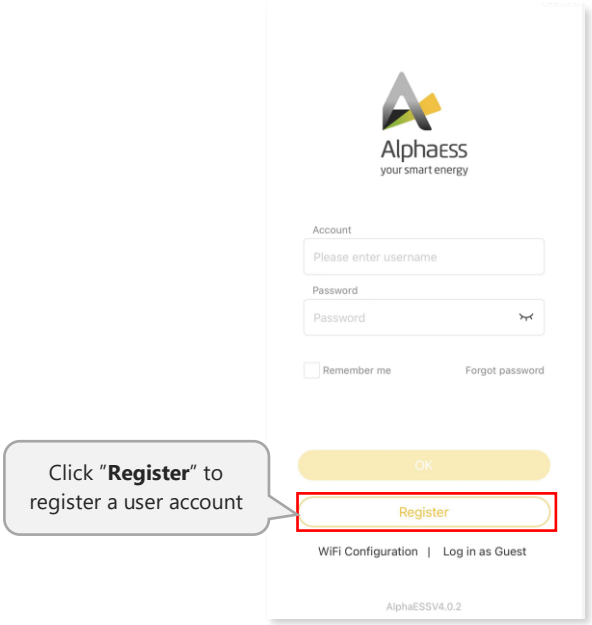

8.5. Register on AlphaCloud

8.5.1. Register an Installer Account on AlphaCloud

If you do not already have an Installer account, you can create a new account on our web server for system monitoring purposes. In addition, AlphaESS Warranty is predicated on this connection to our web server.

The data produced prior to registration can be synchronized to the web server.

Step 1: Please open the portal: www.alphaess.com.

Step 2: Please fill in "Username", "Password" and click "Login" if you have already registered.

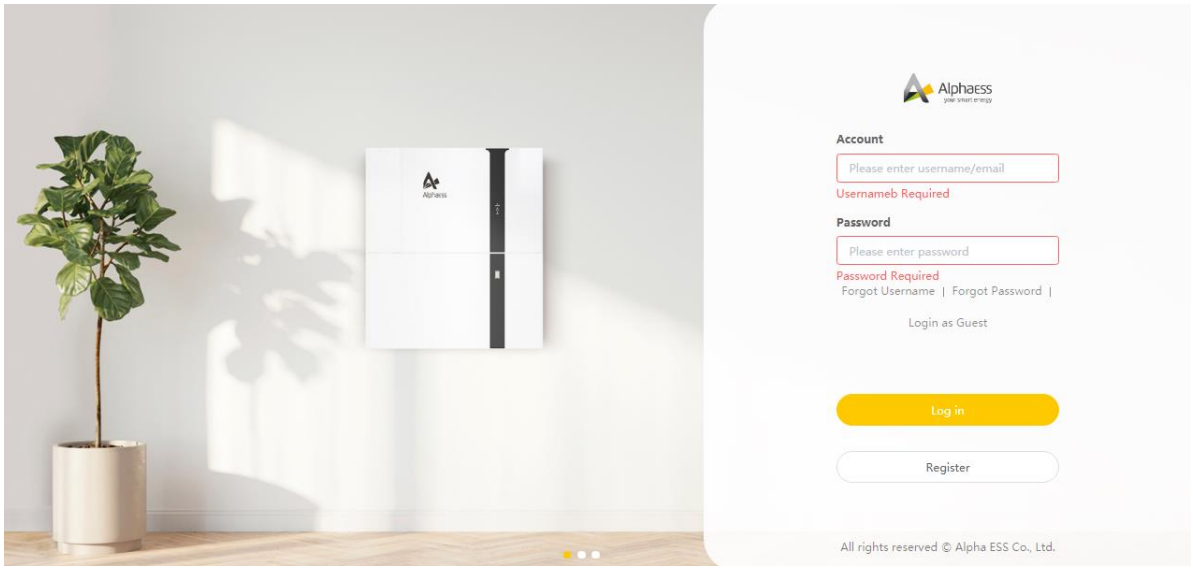

If not, please register by filling in the following web form.

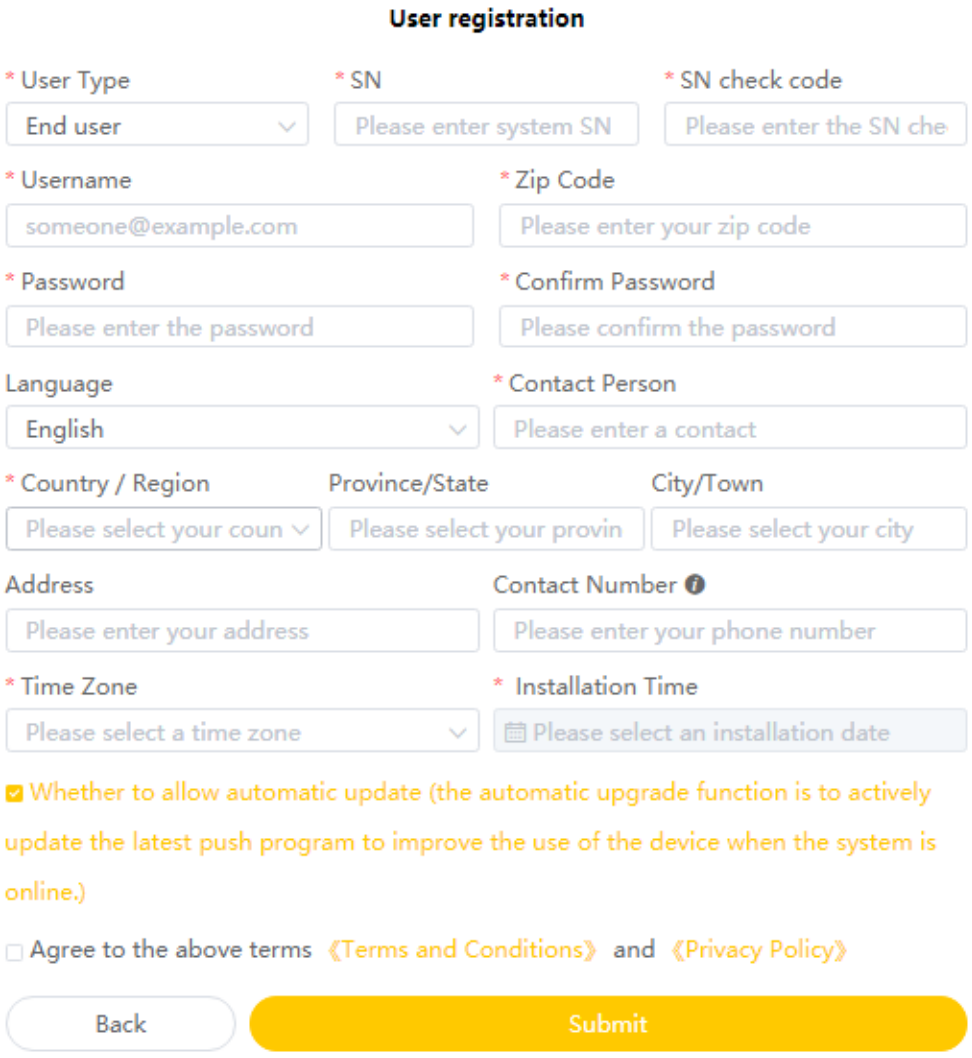

In this form, all fields with a red star are required.
***Serial Number:** SN (please see the type label of the inverter)
***Username:** 5-15 letters / numbers
***Password:** 5-15 letters / numbers / characters
More details are available in the Online Monitoring Web Server Installers User Manual, which can be downloaded from the AlphaESS homepage.

8.5.2. Install New System on AlphaCloud

Installers who haven't yet registered need to click “Register” to visit the registration page. Please refer to the “AlphaCloud Online Monitoring Web Server Installers User Manual”, which you can get from the AlphaESS sales team and get an AlphaESS Installer license number.

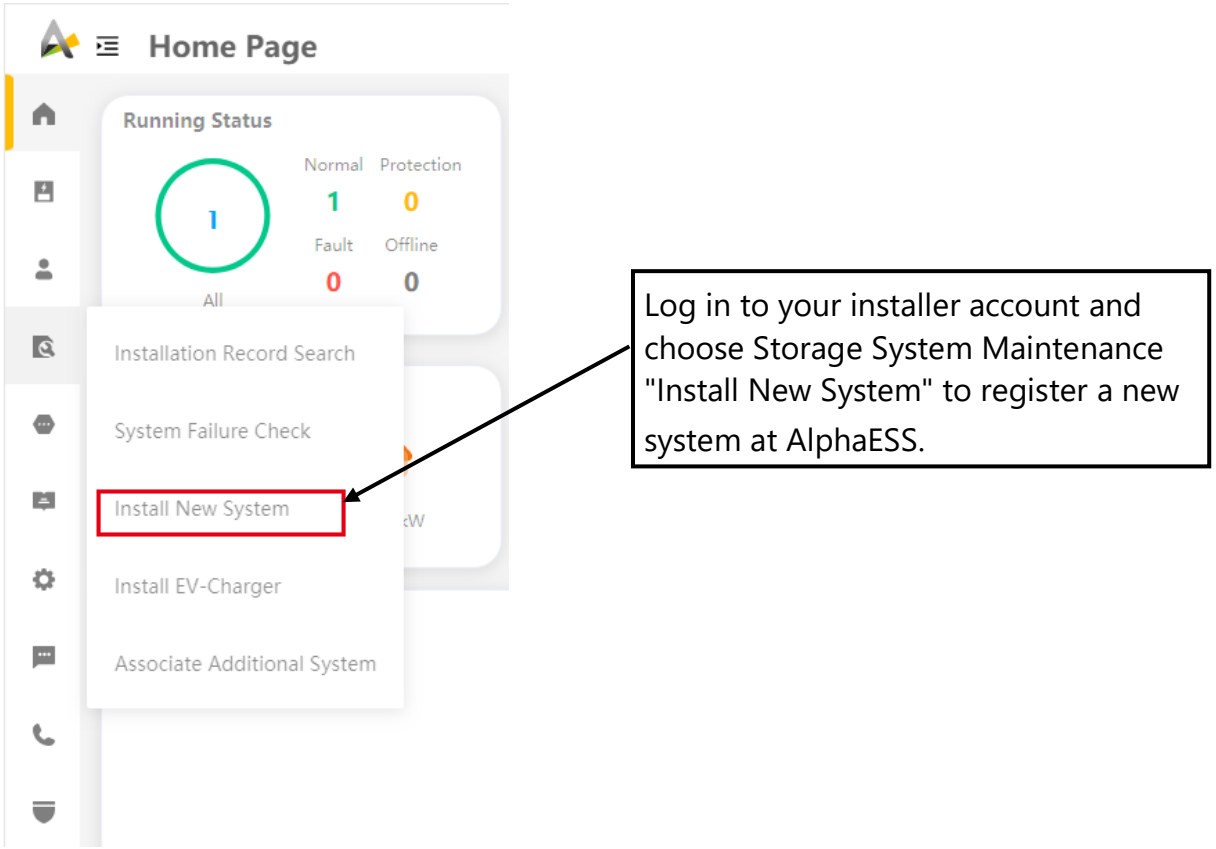

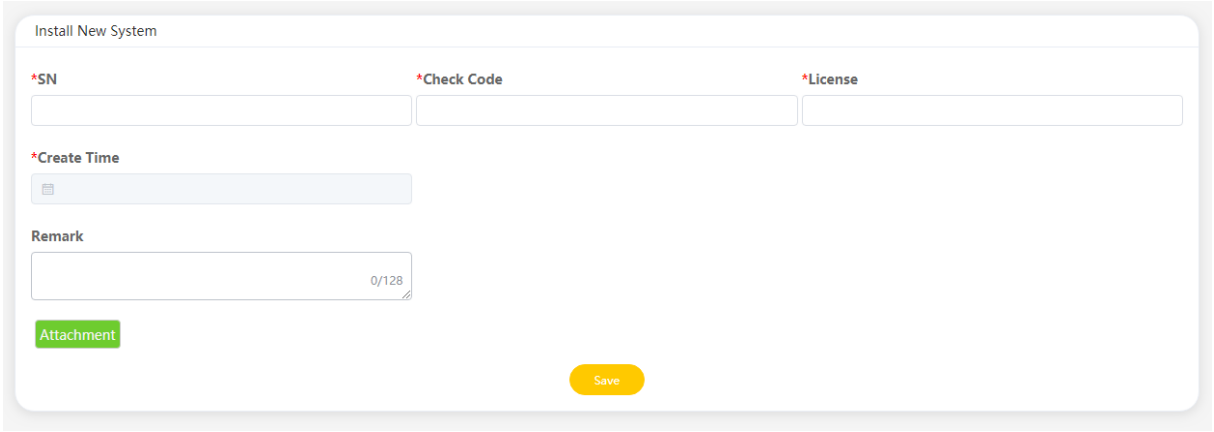

Enter the system S/N, check the code, license, and installation date, then click the “Save” button. The red * indicated a required field. Click the “Browse” button to select any attachment you want to add.

8.6. Check System Wiring and Meter Installation

Check the grid's voltage range and frequency range and the installation (including location, direction and phase sequence) of all CT(s) and/or meter(s).

You can directly commission the system after the system configuration process.

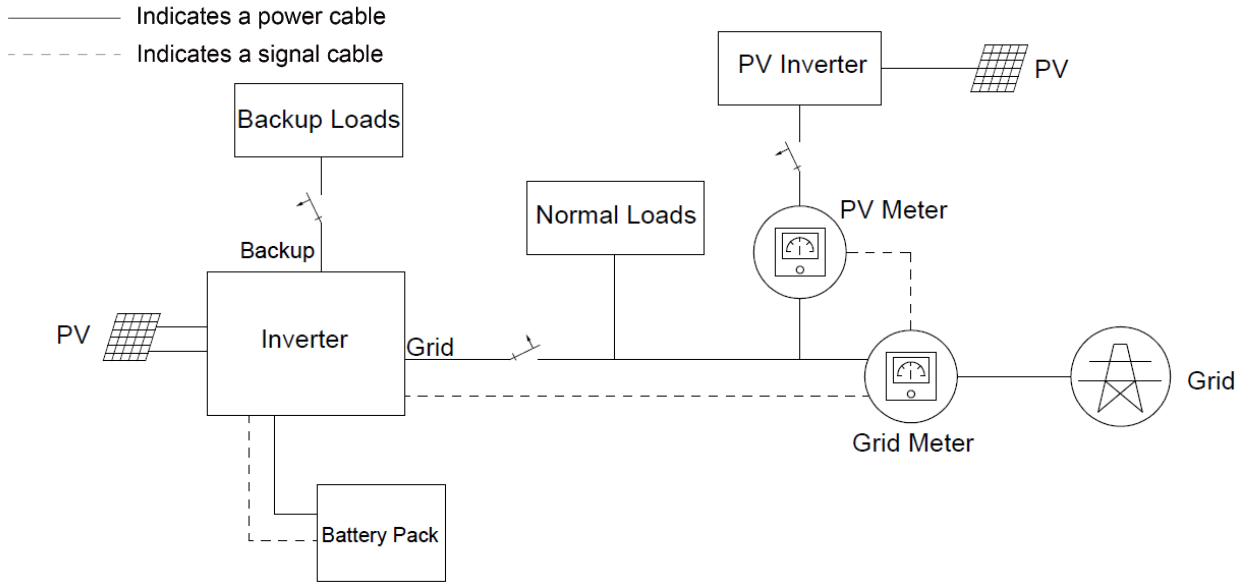

Brief wiring diagram of the hybrid-coupled system

Detailed operating steps to check system wiring and meter installation as follows:
1. Please perform the steps below for the circuit breakers and PV switch in the system
a. Switch on the battery circuit breaker of the energy storage inverter.
b. Switch on the battery circuit breakers of all batteries.
c. Shortly press all power buttons of all batteries within 30 seconds. (For series batteries, please skip this step.)
d. Switch on the AC circuit breaker between the grid port of the energy storage inverter and the grid.
e. Switch on the AC circuit breaker between the backup port of the energy storage inverter and the loads.
f. Switch off the PV switch of the energy storage inverter.
g. Switch off the AC circuit breaker (if there is any) between the PV inverter and the grid.
h. At this moment, the energy storage inverter will enter NORMAL state.
i. Please turn off all loads. If you can't, please ensure that there aren't loads of large power fluctuations connected in the system.
j. Log on to the AlphaESS App and click to page "My System" and note the current "**Load**".

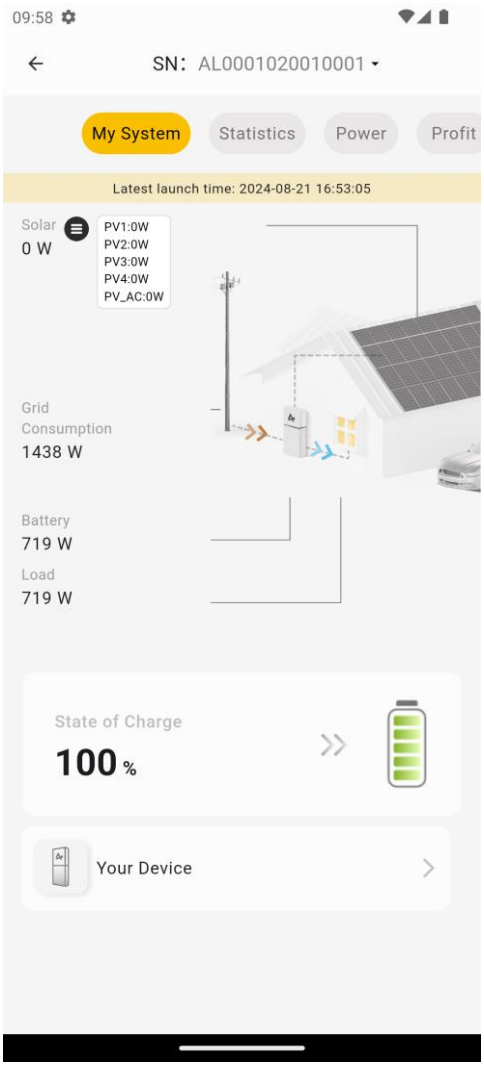

2. Operate the App and follow the instructions below to enable “Charge Batteries from the Grid”.

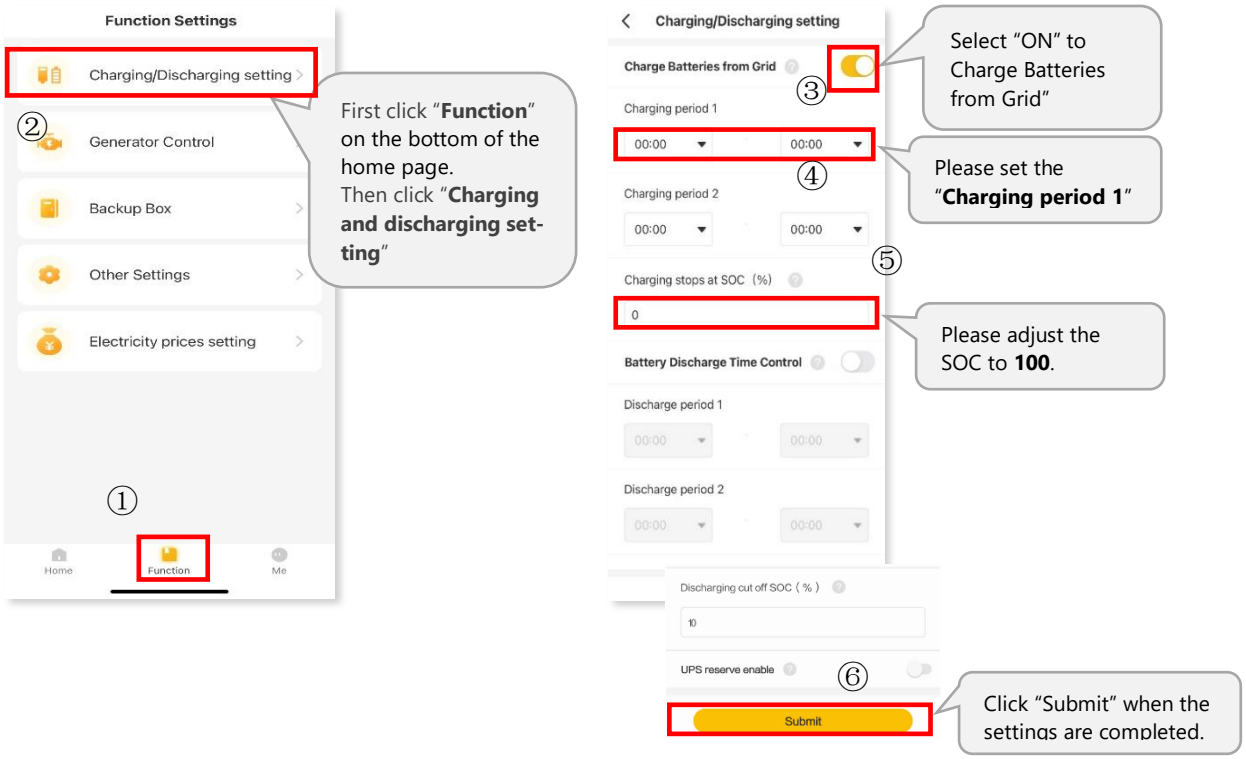

If the formula “Grid Power≈ **Load** + Battery Charging Power” fits well, the grid meter installation of the energy storage inverter is correct. Please remember to deactivate the “Charge Batteries from Grid” by clicking “OFF” and save the changes.

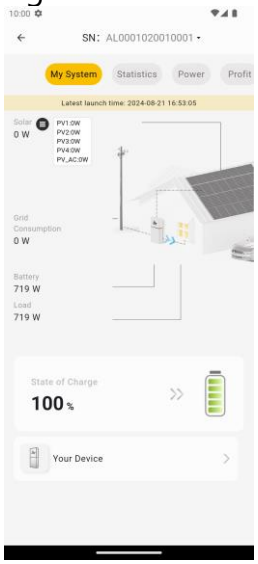

If the data doesn’t fit well, please perform the troubleshooting below.

Meter Type	Solution
BB Plus	Please refer to the relative system wiring diagram to check the wiring. If the error persists, contact AlphaESS customer service for further check.
Meter (without CT)	Check the wiring and location of the grid meter.
Meter (with CT)	Check the location, direction, phase sequence and cable connection of the grid CT.

3. If there isn't PV inverter in the system, please skip this step.
If PV inverter exists in the system, switch on the AC breaker between the PV inverter and the grid.
Click the AlphaESS App, turn to page "Running Information" and check the power value of "PV Inverter Power". If the power value is positive, the meter installation of PV inverter is correct.



If the power value of "PV Inverter Power" is negative, please perform the troubleshooting below.

Meter Type	Solution
BB Plus	Please refer to the relative system wiring diagram to check the wiring. If the error persists, contact AlphaESS service for further check.
Meter (without CT)	Check the wiring and location of the PV meter.
Meter (with CT)	Check the location, direction, phase sequence and cable connection of the PV CT.

4. If there are PV modules connected directly to the energy storage inverter, switch on the PV switch of the energy storage inverter.

5. Switch off the AC breaker between the grid port of the energy storage inverter and the grid. At this moment, please check whether the electrical appliance connected to backup side of the energy storage inverter runs normally. Otherwise, please contact AlphaESS service for further check.

CAUTION

During commissioning, if the LEDs on the display panel of the inverter or the battery show red or yellow, please refer to the troubleshooting chapter of the Installation, Operation & Maintenance Manual.

6. Congratulation. The whole check of system wiring and meter installation has finished successfully.

9. Maintenance and Troubleshooting

9.1. Routine Maintenance

Normally, the energy storage system needs no maintenance or calibration.
However, in order to maintain the accuracy of the SOC, it is recommended to perform a full charge calibration for SOC (charge the battery until the charge power is 0W) on the battery at regular intervals (such as two weeks).
Before cleaning, ensure that the system is disconnected from all power sources. Clean the housing, cover and display panel with a soft cloth.
To ensure that the energy storage system can operate properly in the long term, it is advised to perform routine maintenance as described in this chapter.

Maintenance Checklist

Check Item	Acceptance Criteria	Maintenance Interval
Product cleanliness	The enclosure of the inverter should be free from obstacles or dust.	Once every 6 to 12 months
Product visible damage	The product should be not damaged or deformed.	Once every 6 months
Product running status	1. The product should operate without any abnormal sound. 2. All parameters of the product should be set correctly. Perform this check when the product is running.	Once every 6 months
Electrical connections	1. Cables should be securely connected. 2. Cables should be intact, and in particular, the cable jackets touching the metallic surface should not be scratched. 3. Unused cable glands should be blocked by rubber sealing which are secured by pressure caps.	Perform the first maintenance 6 months after the initial commissioning. Thereafter, perform the maintenance once every 6 to 12 months.

⚠ CAUTION

Risk of burns due to hot enclosure of the inverter

The enclosure of the inverter can get hot during operation.

- Do not touch any parts other than the display panel during operation.
- Wait approximately 30 minutes for the inverter to cool down before cleaning.

9.2. Troubleshooting

9.2.1. Common Errors

NOTICE

1. The four LEDs in the first row are system (SYS), battery (BAT), meter (METER), and communication (COM).

2. The five LEDs in the second row serve two functions:

1) During normal system operation, they indicate the SOC operation status of the batteries connected in this energy storage system.

2) During abnormal system operation, they display corresponding error codes. Each light represents a number, with values of 1, 2, 4, 8, and 16, from right to left.

Communication Troubleshooting

LED Indicator	Error Code	LED Display	Description	Troubleshooting
SYS red light is flashing fast	4		Inverter lost	Inverter communication lost 1. Restart the system. 2. Contact customer service to remotely update the inverter program. 3. If the error persists, contact customer service for further check.
SYS red light is glowing. METER light is flashing fast if Grid meter lost. METER light is flashing slow if PV meter lost. METER light is off if all meters lost.	5		Grid meter lost	Grid side meter lost 1. Check whether the system configuration parameters of the AlphaESS App or AlphaCloud are correct and whether the meter is used on the grid side. 2. Check whether the communication cable of the grid meter is connected correctly (RS485:3A6B). 3. Check whether the communication configuration parameters of the grid meter are correct (communication address and baud rate). 4. If the error persists, contact customer service for further check.

	6	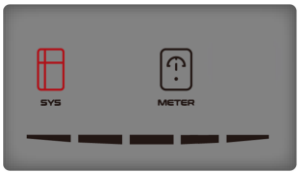	PV meter lost	PV inverter side meter lost 1. Check whether the system configuration parameters of the AlphaESS App or AlphaCloud are correct and whether the meter is used on the PV inverter side 2. Check whether the communication cable of the meter of PV inverter side is connected correctly (RS485:3A6B). 3. Check whether the communication configuration parameters of the meter on the PV inverter side are correct (communication address and baud rate). 4. If the error persists, contact customer service for further check.
SYS red light is glowing, BAT light is off	7		BMS lost	BMS lost 1. Check whether the BMS communication connection between the battery and the inverter is correct. 2. Check if the battery is switched on. 3. If the error persists, contact customer service for further check.

Battery Error Troubleshooting

LED Indicator	Error Code	LED Display	Description	Troubleshooting
SYS red light is on; BAT light is flashing if the battery is faulty.	60002		Circuit_Breaker_ Open	Try to switch on all batteries' circuit breakers. If the error persists, contact customer service for further check.
	60004		Follower_ Battery_ Communication_ Lost	Check the communication cables between batteries. If the error persists, contact customer service for further check.
	60006		Host_Battery_ Communication_ Lost	
	60008		Multi_Host_ error	

Inverter Error Troubleshooting

LED Indicator	Error Code	LED Display	Description	Troubleshooting
SYS red light is flashing fast.	100000		Grid_OVP	1. Check whether grid is abnormal. 2. Confirm whether the grid cable connection is normal. 3. Restart inverter. If the error persists, contact customer service for further check.
	100001		Grid_UVP	1. Check whether the PV input voltage of PV1, PV2 and PV3 exceeds 1000V. If there is no PV input overvoltage, restart the inverter. If the error persists, contact customer service for further check.
	100002		Grid_OFP	
	100003		Grid_UFP	1. Check whether the PV input voltage of PV1, PV2 and PV3 exceeds 1000V. If there is no PV input overvoltage, restart the inverter.

SYS red light is flashing fast	100005		BUS_OVP1	If the error persists, contact customer service for further check.
	100007		Insulation_ fault	1. Check whether PV cable connection is reliable. 2. Check whether PV cable is damaged. If the error persists, contact customer service for further check.
	100008		GFCI_fault	1. Restart inverter and check whether the error persists. If so, please call customer service.
	100010		Grid_relay_ fault	
	100011		Over_ Temperature	1. Check whether the environment around inverter has poor heat dissipation. 2. Confirm whether inverter installation meets the installation requirements.
	100012		PV_Reverse	1.Check whether the PV terminal of the inverter is reversed. If the PV terminal is right, please call customer service.
	100013		BAT_Reverse	1.Check whether the BAT terminal of the inverter is reversed. If the BAT terminal is right, please call customer service.
	100017		MPPT1_OVP	Check the PV1 voltage. If it exceeds 950VDC, reduce the number of PV modules.
	100021		MPPT2_OVP	Check the PV2 voltage. If it exceeds 950V, reduce the number of PV modules
	100025		BAT_OVP	Check whether the actual battery voltage exceeds the battery charge cut-off voltage by more than 20V.

SYS red light is flashing fast.	100026		BAT_UVP	1. Check whether the actual battery voltage is lower than the battery discharge cut-off voltage. If the error persists, contact customer service for further check.
	100027		Battery_lose	1. Confirm whether the battery communication cable connection is normal. 2. check whether the battery voltage sampling value is less than 75V. If the error persists, contact customer service for further check.
	100042		Output_short_ circuit	1. Use a multimeter to test the impedance of the off-grid output. If it is low, check whether the wiring is correct. 2. Restart the inverter. If the error persists, contact customer service for further check.
	100043		Output_ overload	1. Check whether the load exceeds the rated power. 2. Restart the inverter. If the error persists, contact customer service for further check.
	100052		Backup_ovp	1. Restart the inverter. If the error persists, contact customer service for further check.
	100211		Para_CAN	Check the communication cables connection between inverters. If the error persists, contact customer service for further check.
	100213		Para_SW_Diff	Check the inverter software versions. If they are inconsistent, upgrade the inverters to the same software version.
	100214		Para_Module _Fault	Check parallel inverter mode Settings. Only one host is allowed.

	100216		Para_Multi_ Host	

Accessories Error Troubleshooting

LED Indicator	Error Code	LED Display	Description	Troubleshooting
SYS red light is on, METER light is flashing fast.	39		EV Charger Lost	EV Charger lost 1. Check whether the EV communication connection between the EV charger and the inverter is normal. 2. Check whether the batteries are switched on. If the error persists, contact customer service for further check.
	200000		Relay OTP	1. Unplug the charging connector of the EV charger, and wait for about 10 minutes before plugging it back in. If the error persists, contact customer service for further check.
	200001		Output overload	1. Check whether the load exceeds the rated power. 2. Restart the inverter. If the error persists, contact customer service for further check.
	200010		AC leakage current	1. Unplug the charging connector of the EV charger, and wait for about 10 minutes before plugging it back in. If the error persists, contact customer service for further check.
	200011		Input terminal OTP	1. Unplug the charging connector of the EV charger, and wait for about 10 minutes before plugging it back in. If the error persists, contact customer service for further check.
	200014		Relay abnormal	1. The EV charger has a hardware failure and need to be replaced, please contact customer service.
	200015		Ground fault	1. Check whether the grounding method is correct. If there is no grounding or the grounding method is wrong, please follow the

SYS red light is on, METER light is flashing fast.				correct grounding method.
	200016		Reverse phase	1. Shut off the leakage current protection switch of the power distribution cabinet immediately. 2. Check whether the AC input/output cable connection is normal, and verify whether there is an inverse connection of L/N input cables.

9.2.2. Battery Protection Description for SMILE-G3-BAT-8.2P

The three LED indicators on the left front provide information about the protection status of the battery.

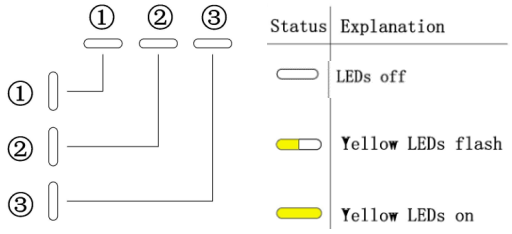

LED Display State	Description	Troubleshooting
	High temperature	Stop discharging and charging until this display state is eliminated and wait for the temperature to drop.
	Low temperature discharge	Stop discharging until this display state is eliminated and wait for the temperature to rise.
	Overcurrent charge	Wait for automatic recovery. If this protection state persists, please call customer service.
	Overcurrent discharge	Wait for automatic recovery. If this protection state persists, please call customer service.
	Cell under voltage	Stop discharging and call customer service immediately.
	Low temperature charge	Stop charging until this protection state is eliminated and wait for the temperature to rise.

NOTICE

During working mode, if the protection status "Cell under voltage"  appears, please press the power button of the battery 5 times within 10 seconds. The BMS will be forced to turn on the MOSFET of discharge so that the inverter can detect the battery's open voltage and begin charging the battery.

9.2.3. Battery Protection Description for Series Battery

The three LED indicators on the front cover provide information about the protection status of the battery.

: Yellow LEDs flashing

: Yellow LEDs on

: Yellow LEDs off

LED Display State	Description	Troubleshooting
	Temperature difference	Wait for automatic recovery. If this protection state persists, please call customer service.
	High temperature	Stop discharging and charging until this protection state disappears. Wait for the temperature to drop.
	Low temperature discharge	Stop discharging until this protection state disappears. Wait for the temperature to rise.
	Overcurrent charge	Wait for automatic recovery. If this protection state persists, please call customer service.
	Overcurrent discharge	
	Cell overvoltage	Wait for automatic recovery. If this protection state persists for a long time, please call customer service.
	Cell under voltage	Stop discharging and call customer service immediately.
	Low temperature charge	Stop charging until this protection state disappears. Wait for the temperature to rise.

NOTICE

During work mode, if the protection status "Cell under voltage" appears, please take the following action:

First, switch off the circuit breaker which is located at the lower left of the battery, switch on the circuit breaker and wait for 3~5s, switch off the circuit breaker, then switch on the circuit breaker and wait for 3~5s, switch off the circuit breaker, at last switch on the circuit breaker of the battery. The BMS will be forced to turn on the MOSFET of discharge, allowing the energy storage inverter to detect the battery's open voltage and begin charging it.

9.2.4. Battery Error Description

The three LED indicators on the front cover provide information about the error status of the battery.

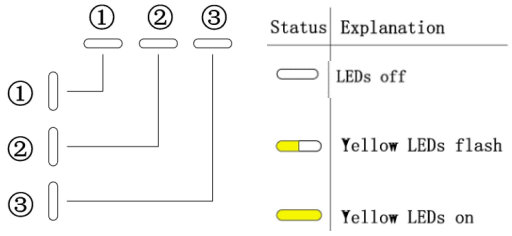

LED Display State	Description	Troubleshooting
	Hardware error	Wait for automatic recovery. If this error persists, please call customer service.
	Hardware error	
	Circuit breaker open	Switch on circuit breaker after power off the battery.
	LMU disconnect (follower)	Reconnect the BMS communication cable.
	SN missing	Please call customer service.
	LMU disconnect (host)	Reconnect the BMS communication cable.
	Software version inconsistent	Please call customer service.
	Multi-host	Restart all batteries.
	MOS over temperature	Power off the battery and power on the battery after 30 minutes.
	Insulation fault	Restart battery. In case this error persists, please call customer service.
	Total voltage fault	Restart battery. In case this error persists, please call customer service.
	Precharge failure	Restart battery. In case this error persists, please call customer service.

10. Product Removal & Return

10.1. Removing the Product

Procedure

- Step 1: Power off the energy storage system as described in Chapter 8.2 Powering off the System.
- Step 2: Disconnect all cables from the system, including communication cables, PV power cables, battery power cables, AC cables, and PE cables.
- Step 3: Remove the Wi-Fi module.
- Step 4: Remove the cable covers of the inverter and the battery.
  Remove the right cover of the inverter.
- Step 5: Remove the inverter from the top of the battery.
- Step 6: Remove the batteries.
- Step 7: Remove the battery wall brackets.

10.2. Packing the Product

If the original packaging is available, put the product inside it and then seal it using adhesive tape.

If the original packaging is not available, put the product inside a suitable cardboard box and seal it properly.

10.3. Disposing of the Product

- If the product's service life expires, dispose of it according to the local disposal rules for electrical equipment and electronic waste.
- Dispose of the packaging and replaced parts according to the rules at the installation site where the device is installed.
- Do not dispose the product with regular household waste.



11. Technical Data

11.1. Datasheet of Inverter (SMILE-G3 Three Phase Inverter)

Item	SMILE-G3-T4-INV	SMILE-G3-T5-INV	SMILE-G3-T6-INV
Input DC (PV Side)			
Recommended Max. PV Power	8000 W	10000W	12000 W
Max. PV Input Voltage	1000 V		
Rated Voltage	720 V		
Start-up Voltage	120 V		
MPPT Voltage Range	140 to 950 V		
Max. Input Current per MPPT	16 A / 16 A / 16 A		
Max. Short Circuit Current per MPPT	24 A / 24 A / 24 A		
MPPT Number	3		
Max. Input Strings Number per MPPT	1		
Surge Category in Accordance with IEC 62109-1	III		
Battery			
Battery Type	LFP ($LiFePO_4$)		
Battery Voltage Range	90 to 700 V		
Max. Charge Power	4 kW	5 kW	6 kW
Max. Discharge Power	4 kW	5 kW	6 kW
Max. Charge/ Discharge Current	40 A / 40 A		
Communication	CAN		
Output AC (Back-up, On Grid)			
Rated Output Power	4 kW	5 kW	6 kW
Rated Apparent Output Power	4 kVA	5 kVA	6 kVA
Rated Output Current	5.8 A	7.3 A	8.7 A
Max. Continuous Output Power	4 kW	5kW	6 kW
Max. Continuous Output Apparent Power	4 kVA	5 kVA	6 kVA
Max. Output Current	5.8 A	7.3 A	8.7 A
Rated Output Voltage	3L/N/PE, 230 / 400V		
Rated Frequency	50 / 60 Hz		

Output AC (Back-up, Off Grid)			
Rated Output Power	4 kW	5 kW	6 kW
Rated Apparent Output Power	4 kVA	5 kVA	6 kVA
Rated Output Current	5.8 A	7.3 A	8.7 A
Max. Continuous Output Power	4 kW	5 kW	6 kW
Max. Continuous Output Apparent Power	4 kVA	5 kW	6 kVA
Max. Output Power ≤ 30s	6 kW	7.5 kW	9 kW
Max. Output Apparent Power ≤ 30s	6 kVA	7.5 kVA	9 kVA
Max. Output Power ≤ 1s	8 kW	10 kW	12 kW
Max. Output Apparent Power ≤ 1s	8 kVA	10 kVA	12 kVA
Back-up Switch Time	<20 ms		
Rated Output Voltage	3L/N/PE, 230 / 400V		
Rated Frequency	50 / 60 Hz		
Input AC (Grid Side)			
Rated Output Voltage	3L/N/PE, 230 / 400V		
Rated Frequency	50/60 Hz		
Max. Input Power	8 kW	10 kW	12 kW
Max. Input Current	11.6 A	14.5 A	17.4 A
Output AC (Grid Side)			
Rated Output Power	4 kW	5 kW	6 kW
Rated Apparent Output Power	4 kVA	5 kVA	6 kVA
Rating Grid Output Current	5.8 A	7.3 A	8.7 A
Operation Phase	Three-phase		
Rated Grid Voltage	3L/N/PE, 230 / 400V		
Grid Voltage Range	150 to 288 V		
Rated Grid Frequency	50 / 60 Hz		
Power Factor	>0.99 (0.8 leading to 0.8 lagging)		
Protection Class	I		
Overvoltage Category	III		
Surge Category in Accordance with IEC 60664-1	II		

Efficiency			
Max. Efficiency, η_{max}	97.8%	97.8%	97.8%
European Weighted Efficiency, η_{EU}	97.0%	97.0%	97.0%
Protection			
Anti-Islanding Protection	Integrated		
Insulation Resistor Detection	Integrated		
Residual Current Monitoring Unit	Integrated		
Output over Current Protection	Integrated		
Output Short Protection	Integrated		
Output Overvoltage Protection	Integrated		
PV Reverse Polarity Protection	Integrated		
PV Overvoltage Protection	Integrated		
PV Switch	Integrated		
Battery Breaker	Integrated		
General Data			
Dimensions (W*H*D)	610*416*212.5 mm		
Weight	29 kg		
Topology	Transformerless		
Operation Temperature Range	-25 to +60 °C		
Max. Permissible Value for Relative Humidity (Condensing)	100%		
Ingress Protection	IP65		
Display	LED		
Noise Emission	<30 dB(A) @1m		
Cooling Concept	Natural convection		
Max. Operating Altitude above MSL	3000 m		
Features			
PV Connection	Vaconn D4 connectors		
Grid Connection	Plug-in connector		
Backup Connection	Plug-in connector		
BAT Connection	Amphenol H4 connectors		
Communication	LAN, Wi-Fi		

Item	SMILE-G3-T8-INV	SMILE-G3-T10-INV
Input DC (PV Side)		
Recommended Max. PV Power	16000 W	20000W
Max. PV Input Voltage	1000 V	
Rated Voltage	720 V	
Start-up Voltage	120 V	
MPPT Voltage Range	140 to 950 V	
Max. Input Current per MPPT	16 A / 16 A	
Max. Short Circuit Current per MPPT	24 A / 24 A	
MPPT Number	3	
Max. Input Strings Number per MPPT	1	
Surge Category in Accordance with IEC 62109-1	III	
Battery		
Battery Type	LFP ($LiFePO_4$)	
Battery Voltage Range	90 to 700 V	
Max. Charge Power	8 kW	10 kW
Max. Discharge Power	8 kW	10 kW
Max. Charge/ Discharge Current	40 A / 40 A	
Communication	CAN	
Output AC (Back-up, On Grid)		
Rated Output Power	8 kW	10 kW
Rated Apparent Output Power	8 kVA	10 kVA
Rated Output Current	11.6 A	14.5 A
Max. Continuous Output Power	8 kW	10 kW
Max. Continuous Output Apparent Power	8 kVA	10 kVA
Max. Output Current	11.6 A	14.5 A
Rated Output Voltage	3L/N/PE, 230 / 400V	
Rated Frequency	50 / 60 Hz	
Output AC (Back-up, Off Grid)		
Rated Output Power	8 kW	10 kW
Rated Apparent Output Power	8 kVA	10 kVA
Rated Output Current	11.6 A	14.5 A

Max. Continuous Output Power	8 kW	10 kW
Max. Continuous Output Apparent Power	8 kVA	10 kW
Max. Output Power ≤ 30s	12 kW	15 kW
Max. Output Apparent Power ≤ 30s	12 kVA	15 kVA
Max. Output Power ≤ 1s	15 kW	15 kW
Max. Output Apparent Power ≤ 1s	15 kVA	15 kVA
Back-up Switch Time	<20 ms	
Rated Output Voltage	3L/N/PE, 230 / 400V	
Rated Frequency	50 / 60 Hz	
Input AC (Grid Side)		
Rated Output Voltage	3L/N/PE, 230 / 400V	
Rated Frequency	50 / 60 Hz	
Max. Input Power	15 kW	15 kW
Max. Input Current	21.7 A	21.7 A
Output AC (Grid Side)		
Rated Output Power	8 kW	10 kW
Rated Apparent Output Power	8 kVA	10 kVA
Rating Grid Output Current	11.6 A	14.5 A
Operation Phase	Three-phase	
Rated Grid Voltage	3L/N/PE, 230 / 400V	
Grid Voltage Range	150 to 288 V	
Rated Grid Frequency	50 / 60 Hz	
Power Factor	>0.99 (0.8 leading to 0.8 lagging)	
Protection Class	I	
Overvoltage Category	III	
Surge Category in Accordance with IEC 60664-1	II	
Efficiency		
Max. Efficiency, η_{max}	97.8%	97.8%
European Weighted Efficiency, η_{EU}	97.0%	97.0%

Protection	
Anti-Islanding Protection	Integrated
Insulation Resistor Detection	Integrated
Residual Current Monitoring Unit	Integrated
Output over Current Protection	Integrated
Output Short Protection	Integrated
Output Overvoltage Protection	Integrated
PV Reverse Polarity Protection	Integrated
PV Overvoltage Protection	Integrated
PV Switch	Integrated
Battery Breaker	Integrated
General Data	
Dimensions (W*H*D)	610*416*212.5 mm
Weight	29 kg
Topology	Transformerless
Operation Temperature Range	-25 to +60 °C
Max. Permissible Value for Relative Humidity (Condensing)	100%
Ingress Protection	IP65
Display	LED
Noise Emission	<30 dB(A) @1m
Cooling Concept	Natural convection
Max. Operating Altitude above MSL	3000 m
Features	
PV Connection	Vaconn D4 connectors
Grid Connection	Plug-in connector
Backup Connection	Plug-in connector
BAT Connection	Amphenol H4 connectors
Communication	LAN, Wi-Fi

11.2. Datasheet of Battery

11.2.1. Datasheet of Battery SMILE-G3-BAT-8.2P

Model	**SMILE-G3-BAT-8.2P**
Battery Type	LFP ($LiFePO_4$)
Weight	78.3 kg
Dimensions (W*H*D)	610*793*212 mm
Ingress Protection	IP21
Installed Energy	8.2 kWh
Usable Energy	7.8 kWh
DoD	95%
Nominal Voltage	256 V
Operating Voltage Range	240 to 288 V
Max. Charge Current*	32 A
Max. Discharge Current*	32 A
Operating Temperature Range	Charge: 0 < T ≤ 55 °C Discharge: -10 < T ≤ 55 °C
Monitoring Parameters	System voltage, current, cell voltage, cell temperature, PCBA temperature
BMS Communication	CAN
System	
Safety	IEC62619 / IEC63056 / IEC62040
Transportation	UN38.3

* Max. charge/discharge current derating may occur with changes in temperature and SOC.

11.2.2. Datasheet of Battery SMILE-G3-BAT-3.6S

Model	**SMILE-G3-BAT-3.6S**
Battery Type	LFP ($LiFePO_4$)
Weight	43.2 kg
Dimensions (W*H*D)	610*435*212.5 mm
Ingress Protection	IP65
Installed Energy	3.6 kWh
Usable Energy	3.6 kWh
DoD	100%
Nominal Voltage	96 V
Operating Voltage Range	90 to 108 V
Max. Charge Current*	42 A
Max. Discharge Current*	42 A
Operating Temperature Range	Charge: 0 < T ≤ 60 °C Discharge: -10 < T ≤ 60 °C
Monitoring Parameters	System voltage, current, cell voltage, cell temperature, PCBA temperature
BMS Communication	CAN
System	
Safety	IEC62619 / IEC63056 / IEC62040
Transportation	UN38.3

* Max. charge/discharge current derating may occur with changes in temperature and SOC.

SMILE-G3-BAT-3.6S is only for the Greek market.

11.2.3. Datasheet of Battery SMILE-G3-BAT-3.8S

Model	SMILE-G3-BAT-3.8S
Battery Type	LFP ($LiFePO_4$)
Weight	38.5 kg
Dimensions (W*H*D)	610*435*212 mm
Ingress Protection	IP21
Installed Energy	3.84 kWh
Usable Energy	3.65 kWh
DoD	95%
Nominal Voltage	96 V
Operating Voltage Range	90 to 108 V
Max. Charge Current*	40 A
Max. Discharge Current*	40 A
Operating Temperature Range	Charge: 0 < T ≤ 50 °C Discharge: -10 < T ≤ 50 °C
Monitoring Parameters	System voltage, current, cell voltage, cell temperature, PCBA temperature
BMS Communication	CAN
System	
Safety	IEC62619 / IEC63056 / IEC62040
Transportation	UN38.3

* Max. charge/discharge current derating may occur with changes in temperature and SOC.

11.2.4. Datasheet of Battery SMILE-G3-BAT-4.0S

Model	SMILE-G3-BAT-4.0S
Battery Type	LFP ($LiFePO_4$)
Weight	43.2 kg
Dimensions (W*H*D)	610*435*212.5 mm
Ingress Protection	IP65
Installed Energy	4.0 kWh
Usable Energy	3.8 kWh
DoD	95%
Nominal Voltage	96 V
Operating Voltage Range	90 to 108 V
Max. Charge Current*	42 A
Max. Discharge Current*	42 A
Operating Temperature Range	Charge: 0 < T ≤ 60 ℃ Discharge: -10 < T ≤ 60 °C
Monitoring Parameters	System voltage, current, cell voltage, cell temperature, PCBA temperature
BMS Communication	CAN
System	
Safety	IEC62619 / IEC63056 / IEC62040
Transportation	UN38.3

* Max. charge/discharge current derating may occur with changes in temperature and SOC.

Appendix 1: System Wiring Diagram

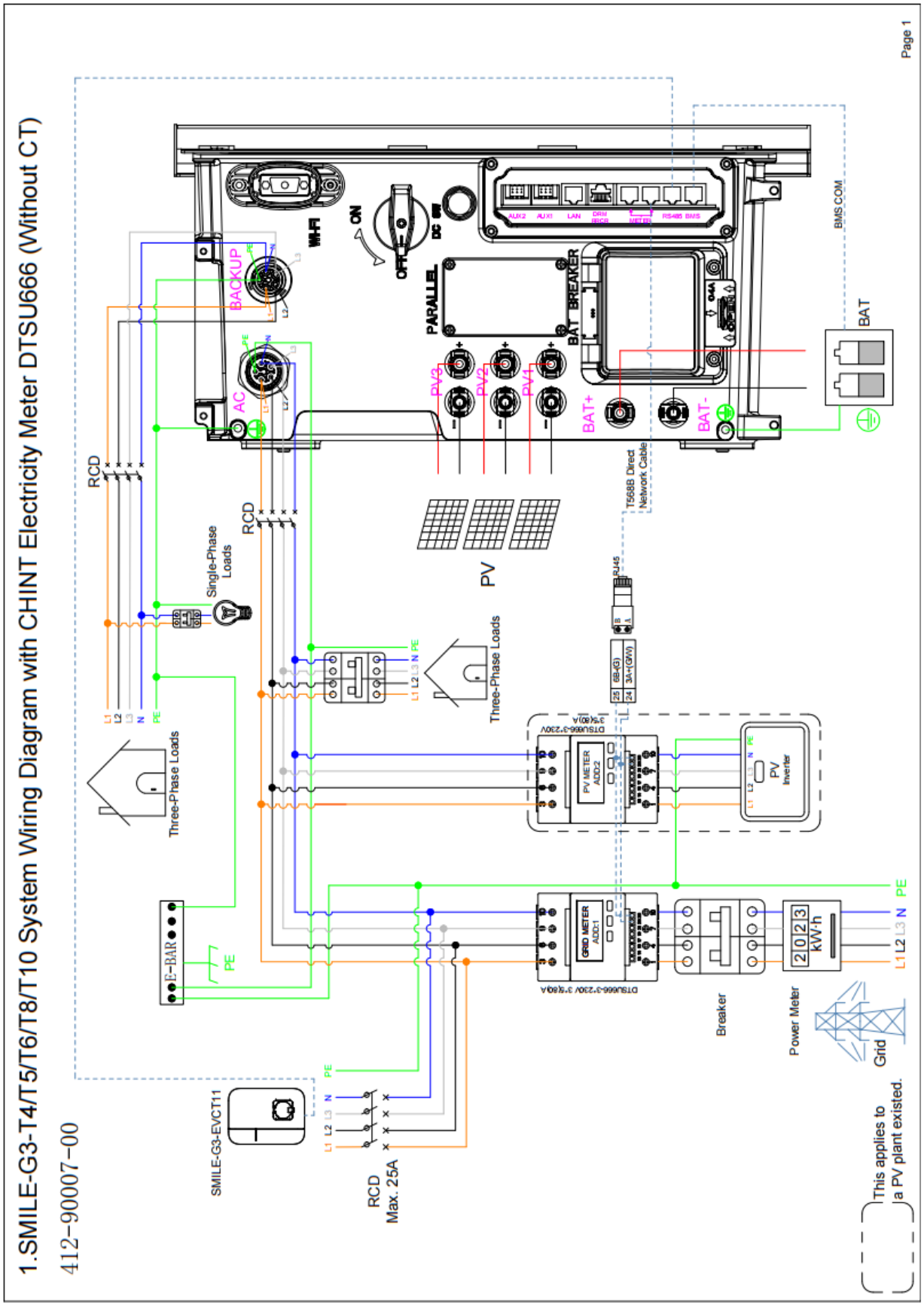

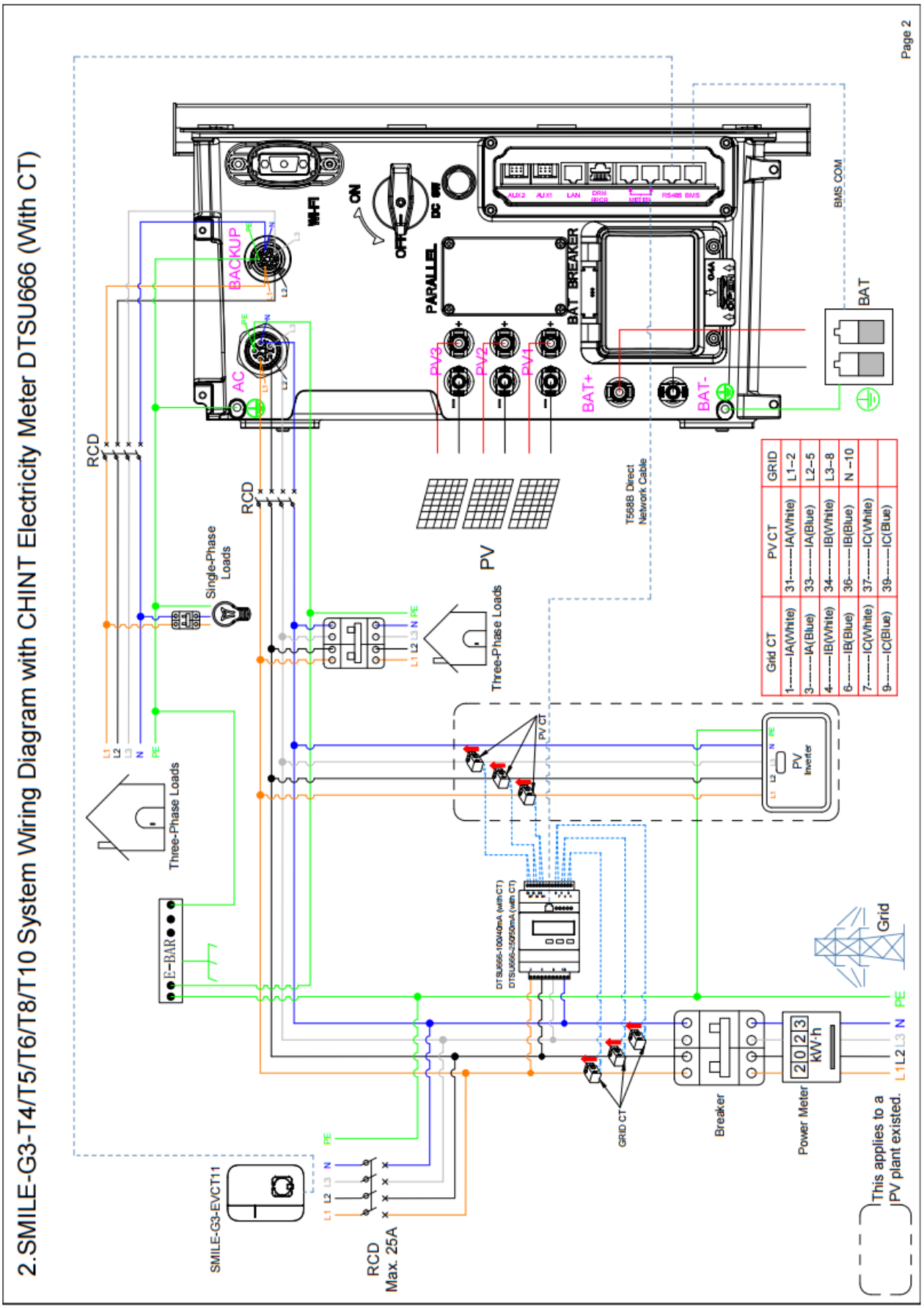
2.SMILE-G3-T4/T5/T6/T8/T10 System Wiring Diagram with CHINT Electricity Meter DTSU666 (With CT)
Page 2
WI-FI
ON
OFF
DC SW
PARALLEL
BAT BREAKER
BACKUP
AC
PV3
PV2
PV1
BAT+
BAT-
BAT
BMS COM
RCD
RCD
Single-Phase Loads
Three-Phase Loads
PV
T568B Direct Network Cable
Three-Phase Loads
PV CT
PV Inverter
E-BAR
DTSU666-100/40mA (with CT)
DTSU666-250/50mA (with CT)
Grid
GRID CT
Breaker
Power Meter
SMILE-G3-EVCT11
RCD
Max. 25A
This applies to a PV plant existed.
Grid CT
1------IA(White)
3------IA(Blue)
4------IB(White)
6------IB(Blue)
7------IC(White)
9------IC(Blue)
PV CT
31------IA(White)
33------IA(Blue)
34------IB(White)
36------IB(Blue)
37------IC(White)
39------IC(Blue)
GRID
L1~2
L2~5
L3~8
N ~10

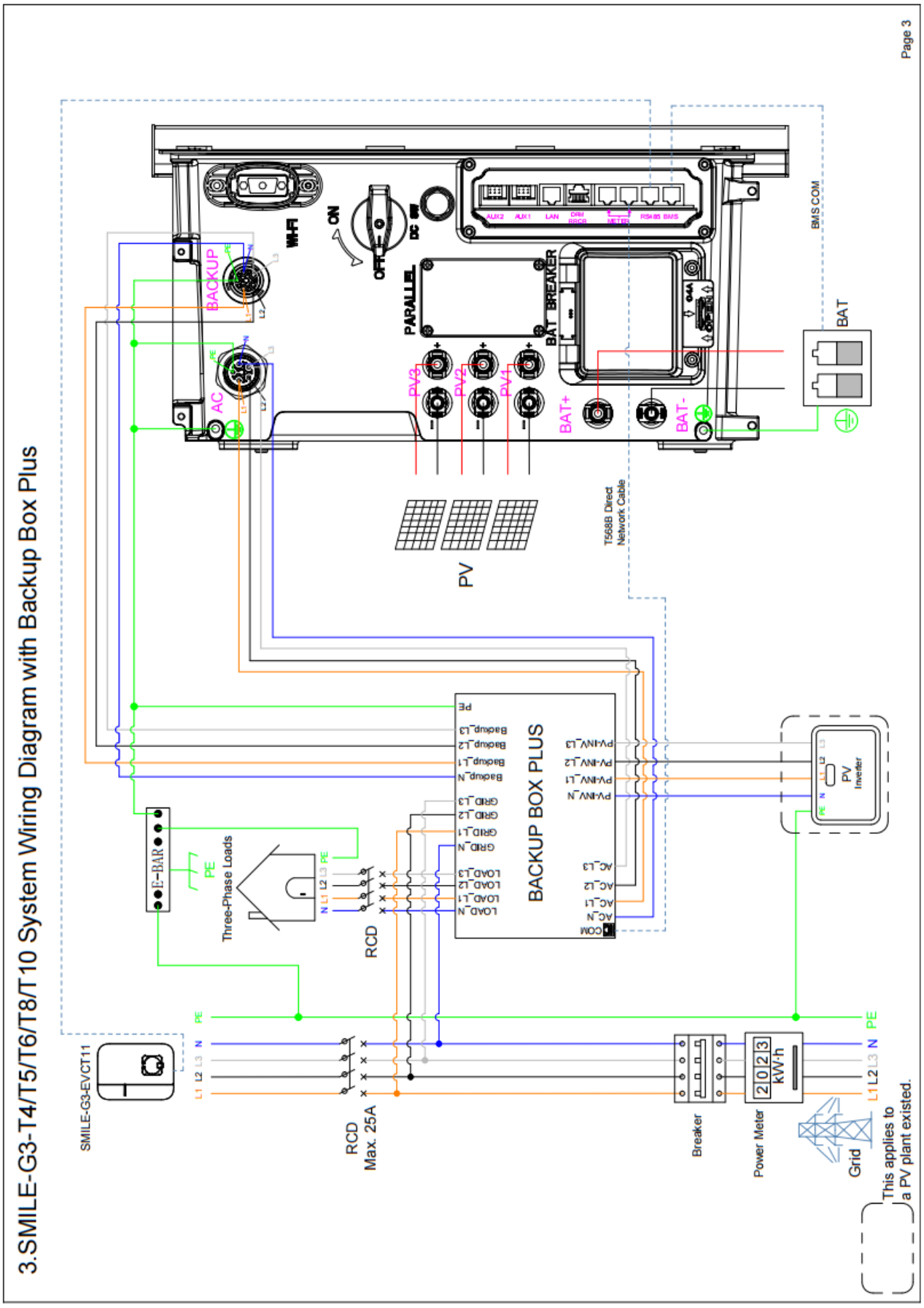
3.SMILE-G3-T4/T5/T6/T8/T10 System Wiring Diagram with Backup Box Plus
Page 3
BACKUP
AC
Wi-Fi
ON
OFF
DC
PARALLEL
BAT BREAKER
BMS COM
BAT
PV3
PV2
PV1
BAT+
BAT-
PV
T568B Direct Network Cable
BACKUP BOX PLUS
E-BAR
PE
Three-Phase Loads
RCD
SMILE-G3-EVCT11
RCD
Max. 25A
Breaker
Power Meter
kW·h
Grid
PV Inverter
This applies to a PV plant existed.

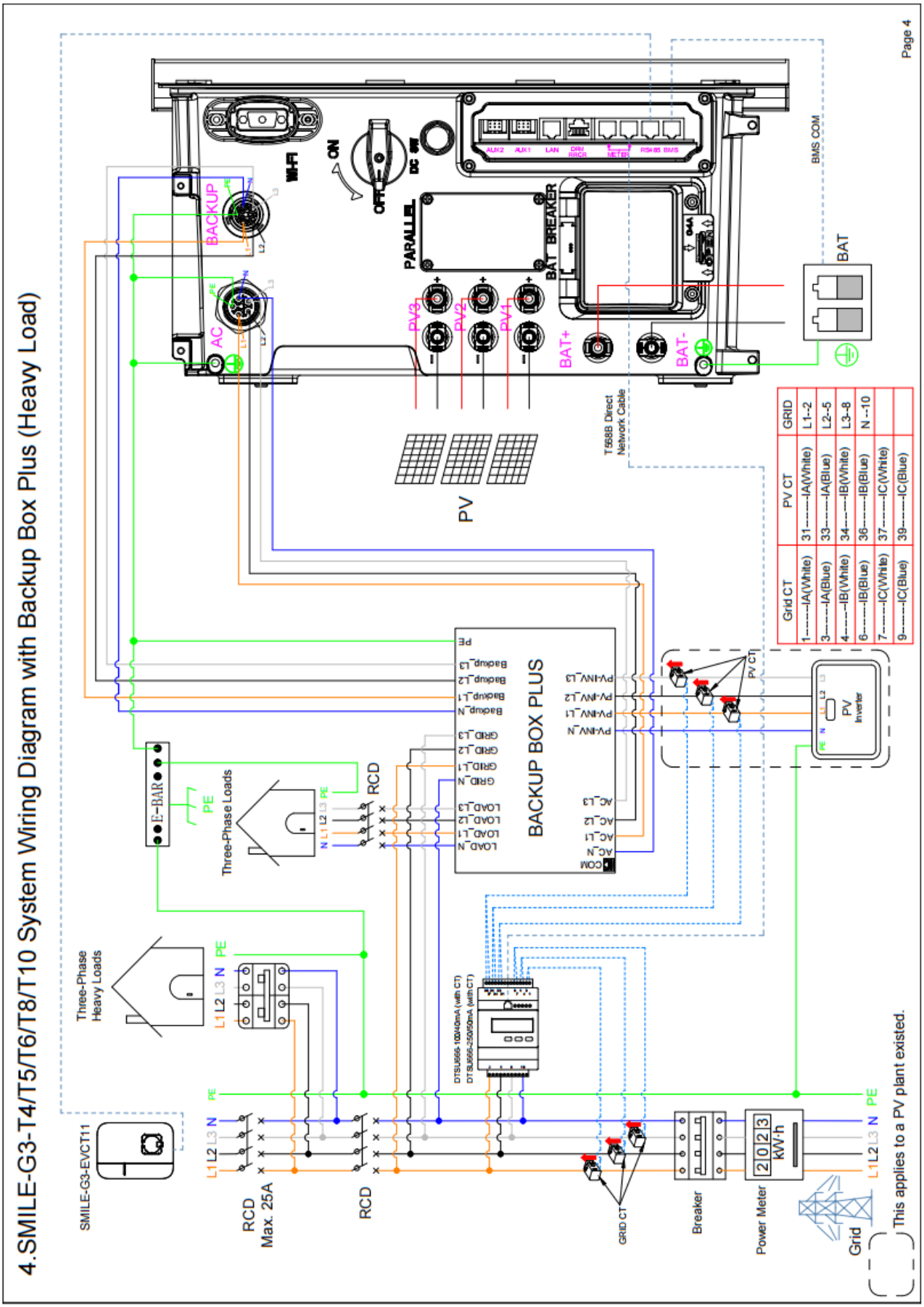
4.SMILE-G3-T4/T5/T6/T8/T10 System Wiring Diagram with Backup Box Plus (Heavy Load)
Page 4
BACKUP
AC
PARALLEL
BAT BREAKER
PV3
PV2
PV1
BAT+
BAT-
BAT
BMS COM
T568B Direct Network Cable
PV
BACKUP BOX PLUS
PV Inverter
PV CT
Three-Phase Loads
Three-Phase Heavy Loads
E-BAR
RCD
SMILE-G3-EVCT11
RCD Max. 25A
GRID CT
Breaker
Power Meter
kW·h
Grid
This applies to a PV plant existed.
Grid CT
1------IA(White)
3------IA(Blue)
4------IB(White)
6------IB(Blue)
7------IC(White)
9------IC(Blue)
PV CT
31------IA(White)
33------IA(Blue)
34------IB(White)
36------IB(Blue)
37------IC(White)
39------IC(Blue)
GRID
L1--2
L2--5
L3--8
N --10

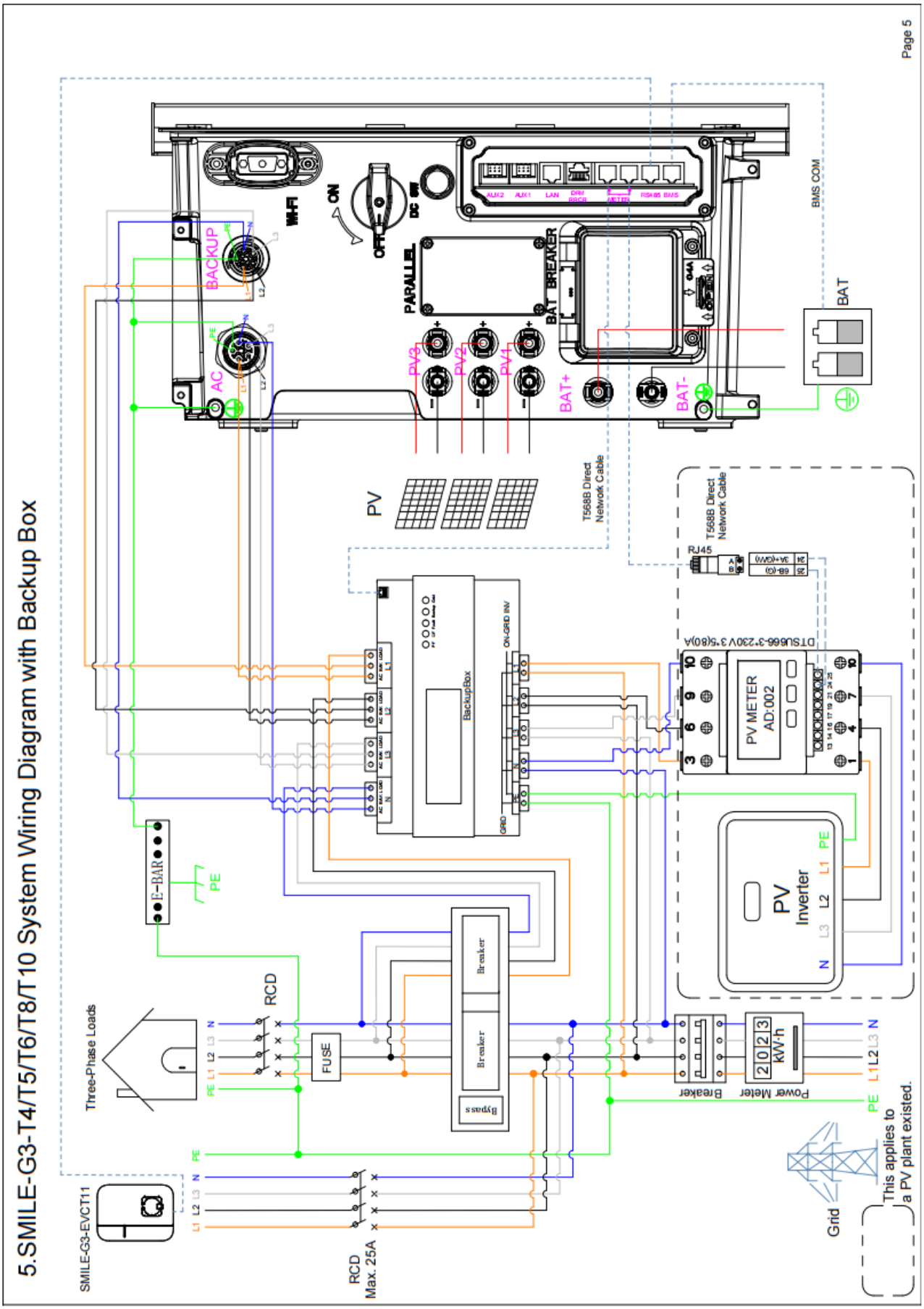
5.SMILE-G3-T4/T5/T6/T8/T10 System Wiring Diagram with Backup Box
Page 5
BACKUP
AC
PARALLEL
BAT BREAKER
BMS COM
BAT
PV3
PV2
PV1
BAT+
BAT-
PV
T568B Direct Network Cable
RJ45
BackupBox
ON-GRID INV
PV METER AD:002
PV Inverter
L1 L2 L3 N PE
E-BAR
PE
RCD
Three-Phase Loads
FUSE
Breaker
Bypass
Power Meter
kW·h
Grid
This applies to a PV plant existed.
SMILE-G3-EVCT11
RCD Max. 25A

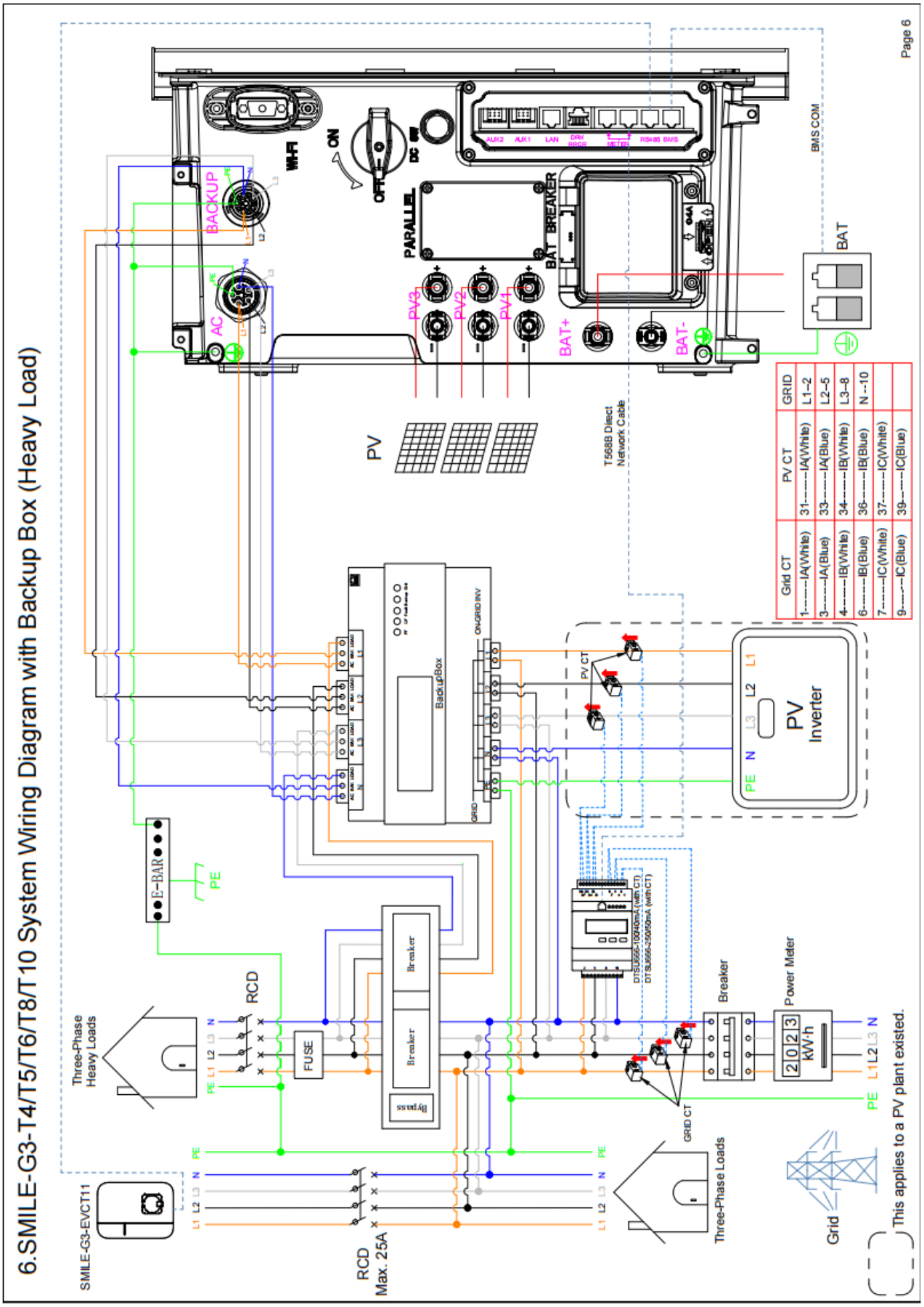
6.SMILE-G3-T4/T5/T6/T8/T10 System Wiring Diagram with Backup Box (Heavy Load)
Page 6
BACKUP
AC
PARALLEL
BAT BREAKER
BMS COM
BAT
PV3
PV2
PV1
BAT+
BAT-
PV
T568B Direct Network Cable
Grid CT
PV CT
GRID
1------IA(White)
31------IA(White)
L1--2
3------IA(Blue)
33------IA(Blue)
L2--5
4------IB(White)
34------IB(White)
L3--8
6------IB(Blue)
36------IB(Blue)
N --10
7------IC(White)
37------IC(White)
9------IC(Blue)
39------IC(Blue)
BackupBox
ON-GRID INV
PV CT
PV Inverter
E-BAR
PE
RCD
FUSE
Breaker
Breaker
Bypass
DTSU666-100/40mA (with CT)
DTSU666-250/50mA (with CT)
Breaker
Power Meter
Three-Phase Heavy Loads
GRID CT
Three-Phase Loads
SMILE-G3-EVCT11
RCD Max. 25A
Grid
This applies to a PV plant existed.

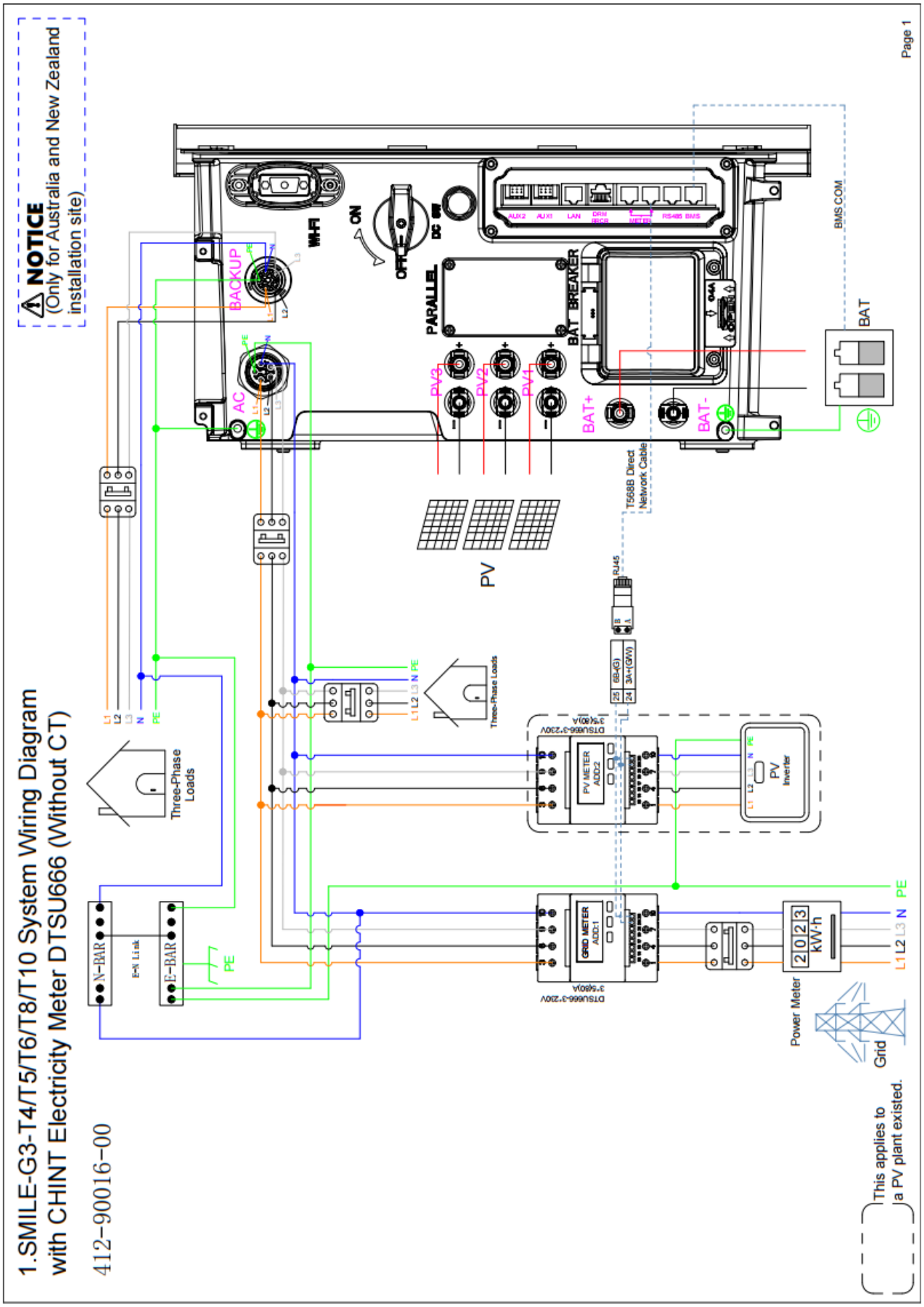
NOTICE
(Only for Australia and New Zealand installation site)
1.SMILE-G3-T4/T5/T6/T8/T10 System Wiring Diagram
with CHINT Electricity Meter DTSU666 (Without CT)
412-90016-00
Page 1
Wi-Fi
ON
OFF
DC SW
PARALLEL
BAT BREAKER
BACKUP
AC
PV3
PV2
PV1
BAT+
BAT-
BAT
BMS COM
T568B Direct Network Cable
RJ45
PV
Three-Phase Loads
N-BAR
E-BAR
N-E Link
PE
PV METER ADD:2
PV Inverter
GRID METER ADD:1
DTSU666-3 230V
3*5(80)A
Power Meter
Grid
This applies to a PV plant existed.

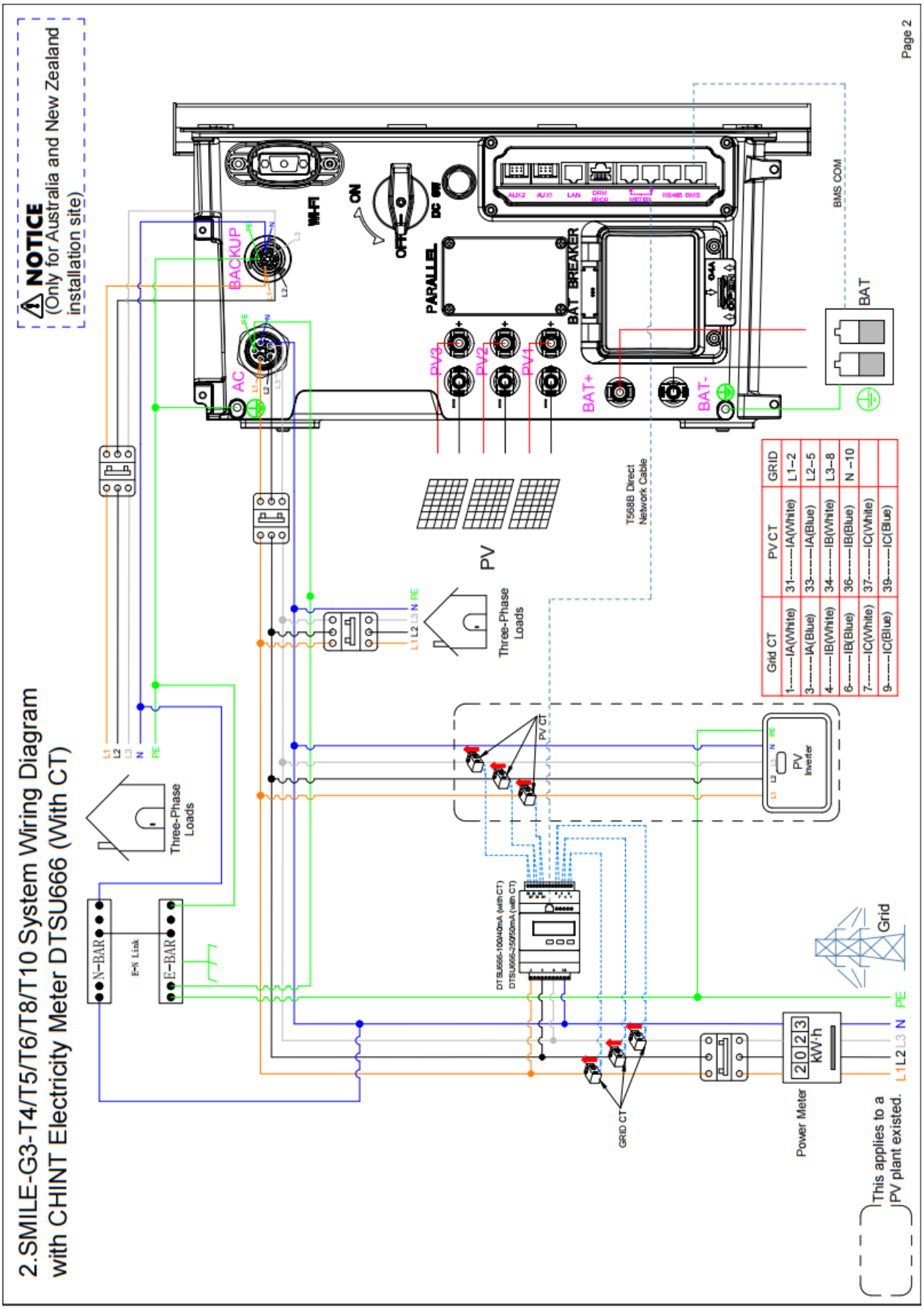
NOTICE
(Only for Australia and New Zealand installation site)
2.SMILE-G3-T4/T5/T6/T8/T10 System Wiring Diagram
with CHINT Electricity Meter DTSU666 (With CT)
Page 2
Wi-Fi
ON
OFF
DC SW
PARALLEL
BAT BREAKER
BMS COM
BAT
BACKUP
AC
PV3
PV2
PV4
BAT+
BAT-
PV
T568B Direct Network Cable
Three-Phase Loads
PV CT
PV Inveter
N-BAR
E-BAR
N-E Link
DTSU666-100/40mA (with CT)
DTSU666-250/50mA (with CT)
Grid
GRID CT
Power Meter
This applies to a PV plant existed.
Grid CT
PV CT
GRID
1------IA(White)
31------IA(White)
L1--2
3------IA(Blue)
33------IA(Blue)
L2--5
4------IB(White)
34------IB(White)
L3--8
6------IB(Blue)
36------IB(Blue)
N --10
7------IC(White)
37------IC(White)
9------IC(Blue)
39------IC(Blue)

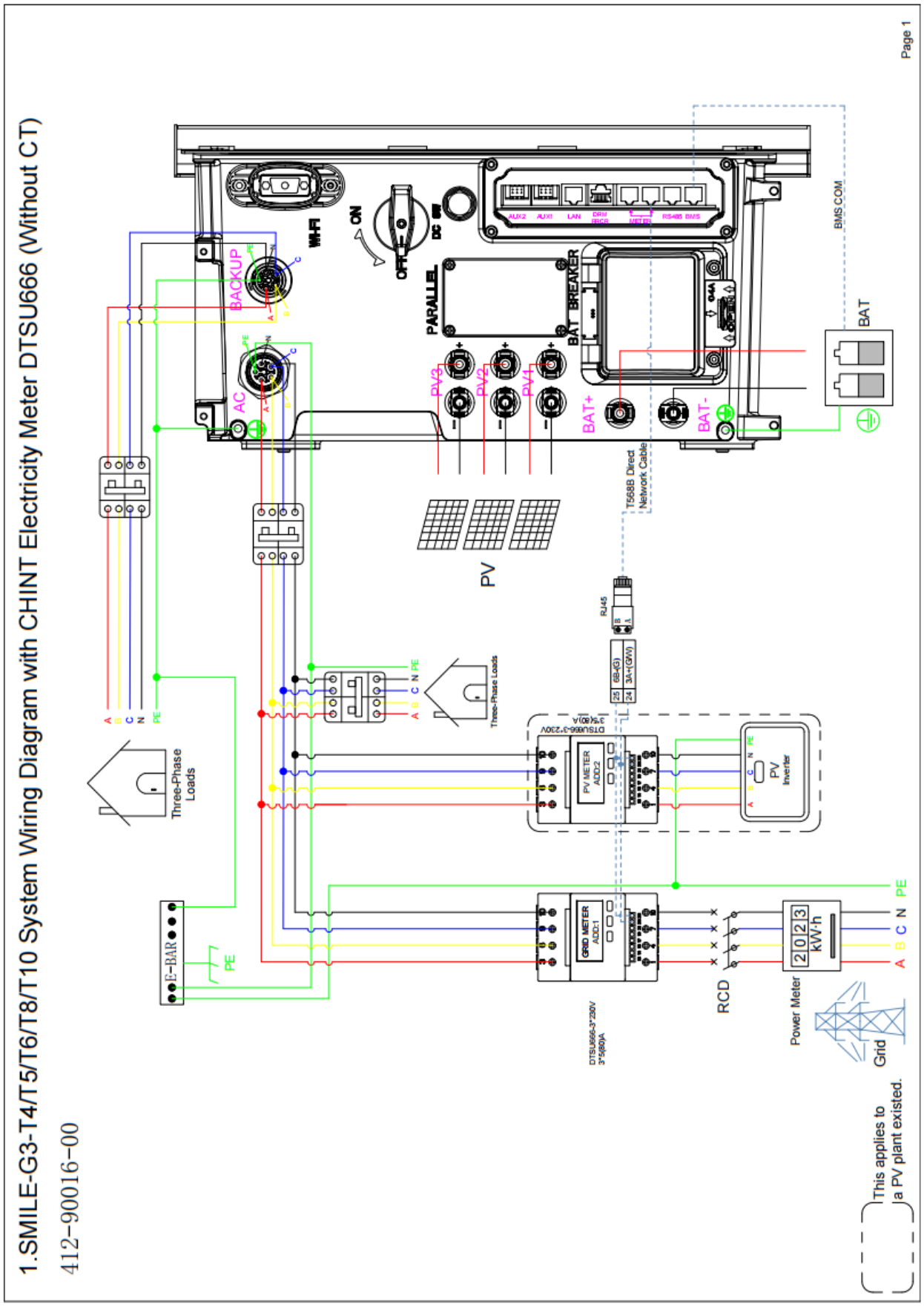
1.SMILE-G3-T4/T5/T6/T8/T10 System Wiring Diagram with CHINT Electricity Meter DTSU666 (Without CT)
412-90016-00
Page 1
Wi-Fi
ON
OFF
DC SW
PARALLEL
BAT BREAKER
BACKUP
AC
PV3
PV2
PV1
BAT+
BAT-
BAT
BMS COM
T568B Direct Network Cable
PV
RJ45
Three-Phase Loads
E-BAR
PE
PV METER ADD:2
PV Inverter
GRID METER ADD:1
DTSU666-3*230V 3*5(80)A
RCD
Power Meter
Grid
This applies to a PV plant existed.

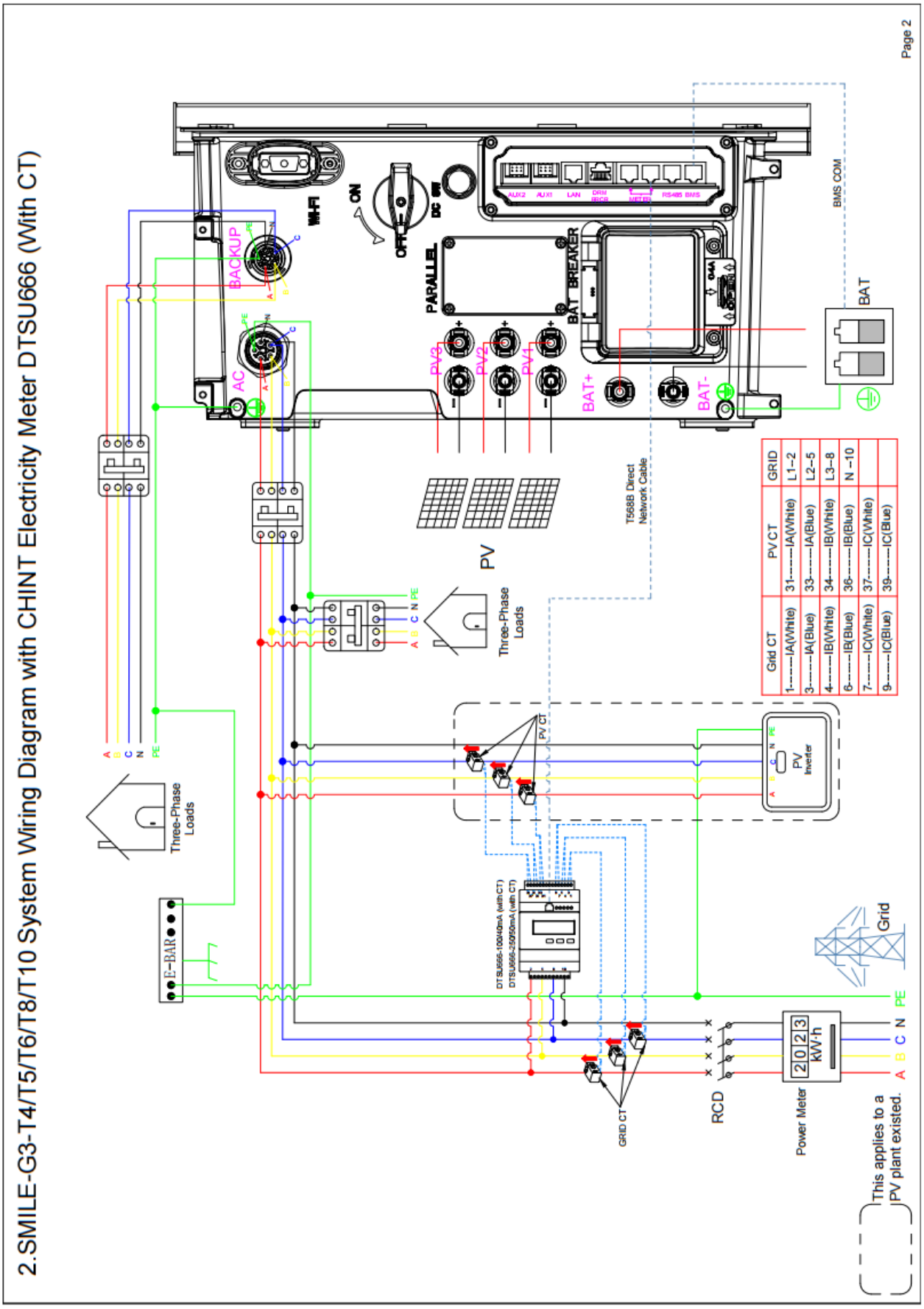
2.SMILE-G3-T4/T5/T6/T8/T10 System Wiring Diagram with CHINT Electricity Meter DTSU666 (With CT)
Page 2
BACKUP
AC
PARALLEL
BAT BREAKER
BMS COM
BAT
PV3
PV2
PV1
BAT+
BAT-
T568B Direct Network Cable
PV
Three-Phase Loads
Three-Phase Loads
E-BAR
PV CT
PV Inverter
DTSU666-100/40mA (with CT)
DTSU666-250/50mA (with CT)
Grid
GRID CT
RCD
Power Meter
kW-h
This applies to a PV plant existed.
Grid CT
1------IA(White)
3------IA(Blue)
4------IB(White)
6------IB(Blue)
7------IC(White)
9------IC(Blue)
PV CT
31------IA(White)
33------IA(Blue)
34------IB(White)
36------IB(Blue)
37------IC(White)
39------IC(Blue)
GRID
L1~2
L2~5
L3~8
N ~10

Appendix 2: Regional Application Standard

Please check with your local grid company and choose the corresponding regional application standard, the power quality modes Volt-VAR and Volt-Watt will be running automatically. (Only for regions with AS/NZW 4777.2 safety standard)

Regional Application Standard	Electric Company
Australia A	N/A
Australia B	N/A
Australia C	N/A
New Zealand	N/A
Vector	New Zealand Vector

@AlphaEnergyStorageSystem @AlphaESS @alpha_ess @AlphaESS www.alphaess.com

Alpha ESS Co., Ltd.

+86 513 8060 6891
info@alpha-ess.com
www.alphaess.com
Jiuhua Road 888, Nantong High-Tech Industrial Development Zone, Nantong City, 226300

Alpha ESS Suzhou Co., Ltd.

+86 512 6828 7609
info@alpha-ess.com
www.alphaess.com
Building 10-A, Canal Town Industrial Park, 99 Taihu E Rd, Wuzhong District, Suzhou 215000

Alpha ESS Europe GmbH

+49 610 3459 1601
europe@alpha-ess.de
www.alphaess.de
Paul-Ehrlich-Straße 1a, D-63225 Langen, Hessen

Alpha ESS Australia Pty. Ltd.

+61 402 500 520 (Sales)
+61 1300 968 933 (Technical Support)
info@alpha-ess.com
www.alphaess.com

Alpha ESS Italy S.r.l.

+39 339 462 4288
info@alpha-ess.it
www.alphaess.com
Via Don Minzoni, 17, Calenzano Firenze 50041

Alpha ESS Korea Co., Ltd

info@alpha-ess.com
2F, 19-4, Nohyeong 11-gil, Jeju-si, Jeju-do, Republic of Korea

Alpha ESS UK Co., Ltd

+44 145 354 5222
info@alpha-ess.com
Drake House, Long Street, Dursley, gl11 4hh

Alpha ESS International Pte. Ltd.

+65 6513 1125 / +65 6513 1126
Singapore@alpha-ess.com
2 Corporation Road #01-06A Corporation Place Singapore 618494

Alpha ESS USA, Inc.

+1 408 368 7828
usa@alpha-ess.com
Unit 5 2180 S Ivanhoe St, Denver, CO 80222